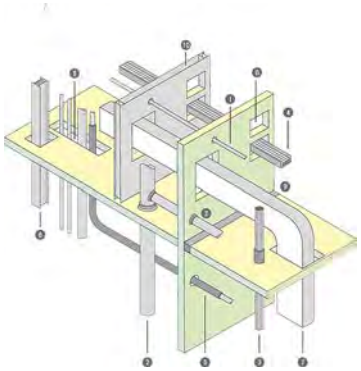

International Fireproof Technology Inc
Firestop Submittal

Technical Service 1-949 975 8588 * Fax 1 949 724 8898

APPROVALS FOR IFTI FIRESTOP PRODUCTS

Below is a list of Model Building Codes requiring the use of firestop products in various types of constructions and occupancies. Most local codes are derived from one or more of these model codes. IFTI Firestop products and systems meet the through-penetration firestopping requirements of all of these codes.

ICC . . . . . International Code Council; International Building Code
ICBO . . . . . International Code of Building Officials; Uniform Building Code
NBCC . . . . . National Building Code of Canada
NFPA 101 . . National Fire Protection Association Life Safety Code
IRC . . . . . International Residence Code

Certain cities, counties and states have written their own code requirements which may supersede or supplement model building codes, check with these authorities for approvals.

IFTI Products are UL Classified, Intertek Listed and conform to the codes and test requirements shown below.

UL 1479 . . . . . Fire Tests of Through-Penetration Firestops
UL 2079 . . . . . Tests for Fire Resistance of Building Joint Systems
ASTM E 1966 . . . . . Standard Test Method for Fire Resistive Joint Systems
ASTM E 814 . . . . . Methods for Fire Tests of Through-Penetration Fire Stops
NFPA 101 . . . . . National Fire Protection Association Life Safety Code
ASTM E 84 (UL 723) . . Test Method for Surface Burning Characteristics of Building Materials
ASTM E 119 (UL 263) . . Method for Fire Tests of Building Construction and Materials
ULC CAN4-S115M . . . . Standard Method of Fire Tests of Firestop Systems
ASTM E 2307 . . . . . Standard Test Method for Determining Fire Resistance of Perimeter Fire Barriers Using Intermediate-Scale, Multi-story Test Apparatus

---

Questions or Additional Information call Technical Service 1-949 975 8588 * Fax 1 949 724 8898

International Fireproof Technology Inc.
17528 Von Karman Ave. Irvine, CA 92614
Office: 949-975-8588
Web Site: www.Painttoprotect.com
Email: ptp@painttoprotect.com

APPLICATIONS

USES												
FIRESTOP SYSTEM	**No penetration**	**Metallic pipe**	**Plastic pipe**	**Cable bundle**	**Cable tray**	**Insulated pipe**	**Bursway**	**Air duct**	**Multiple penetration**	**Joint systems curtain wall**	**Partition walls**	**Putty pad**
Fire Barrier Caulk		●	●	●	●	●	●	●	●			
Fire Barrier Silicone Sealant	●	●	●		●	●	●	●	●	●	●	
Elasomeric FireCaulk										●	●	
Firestop Putty		●	●		●	●	●	●				
Smoke and Acoustic Sealant										●	●	
Moldable Firestop Putty		●	●	●	●	●		●	●			
Putty Pads												●
Intumescent Strip			●		●	●			●			

APPLICATIONS

USES												
FIRESTOP SYSTEM	**No penetration**	**Metallic pipe**	**Plastic pipe**	**Cable bundle**	**Cable tray**	**Insulated pipe**	**Bursway**	**Air duct**	**Multiple penetration**	**Joint systems curtain wall**	**Partition walls**	**Putty pad**
Firestop Collars			●			●			●			
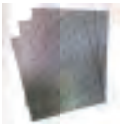 Firestop Sheet FP-02	●	●	●		●	●		●	●		●	
FP-04+ Firestop Sheet	●	●	●		●	●	●	●	●		●	
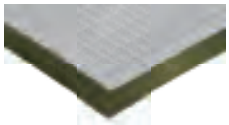 Coated Firestop Board FP05		●			●							
GC99-20 Fireproof Coating		●			●							
Mortar CFS01	●	●	●		●	●	●		●			
US110 Fire Barrier Foam	●	●	●	●	●			●	●			
US150 Fire Barrier Foam	●	●	●	●	●			●	●			

APPLICATIONS

USES												
FIRESTOP SYSTEM	**No penetration**	**Metallic pipe**	**Plastic pipe**	**Cable bundle**	**Cable tray**	**Insulated pipe**	**Bursway**	**Air duct**	**Multiple penetration**	**Joint systems curtain wall**	**Partition walls**	**Putty pad**
US 150 Firestop Brick	●			●	●			●	●			
Fire Barrier Silicone Sealant			●	●	●	●	●	●				
Pro Wrap	●	●	●	●	●	●	●	●	●	●	●	
Foil Tape	●	●	●	●	●	●	●	●	●	●	●	

CONTENTS

INSS1440 Fire Barrier Caulk 6

INSS2460 & INSS2460+ 8

INSS1186 Elastomeric FireCaulk..... 10

FM012 Firestop Putty 12

INSS0285 Smoke and Acoustic Sealant 14

FM011 Moldable Firestop Putty 16

Putty Pad 18

INFS0812..... 20

SSCI Firestop Collar 22

FP-02 Firestop Sheet 24

FP-04+ Firestop Sheet..... 26

FP05 Coated Firestop Board 28

CFS01 Mortar 30

US110 Fire Barrier Foam 32

US150 Fire Barrier Foam 34

US 150 Firestop Brick 36

Fireproof Blanket FB01-15..... 38

ProWrap 40

Foil Tape..... 42

DC315 Intumescent Coating..... 44

DC333 46

DC5040 Intumescent Coating..... 48

DC310 Fireproof cable coating 50

DC6150 Cable Coating..... 52

DC 68 Spray to Protect..... 54

HITS Intumescent Sheet..... 56

INSS1440 Fire Barrier Caulk

Applications

Description

Industry leading Firestop Technology, INSS1440 Fire Barrier Caulk is a single component water-based acrylic intumescent firestop sealant.

INSS1440 Listed designs use less product and offer exceptional performance, making it more cost effective than other traditional firestop caulking's. The product's fast expansion technology quickly fills voids, offering excellent protection from fire, heat transfer, smoke and gases.

INSS1440 is used for sealing gaps around single or multiple penetrations through interior walls and floors, or for sealing gaps around doors and window frames in critically fire rated structures.

INSS1440 Fire Barrier Caulk will adhere to most construction materials and penetrant items, is installation friendly, asbestos and halogen free, and can be painted after full curing.

Specifications

Specific Density:	**1.50 ± 0.1 g/cm^3**
Color:	**Red, Gray**
VOC:	**23 g/L**
STC:	**64**
Tack Free time:	**30 minutes**
Curing time:	**7 - 21 days**
Expansion rate:	**3 - 5 times**
Application temperature:	**40° F - 104° F (5° C - 40° C)**
In-Service Temperature:	**-13° F - 176° F (-25° C - 80° C)**
Storage Temperature:	**50° F - 95° F (10° C - 35° C)**
Packaging:	**310 ml/Tube, 25 Tubes/CTN**
	20 fl. oz./Sausage, 20 Sausages/CTN
	1 gal/pail & 5 gal/pail
Shelf Life:	**24 months**
Performance:	**50+ years HOAC tested**

Fill, void or cavity material. For use in through-penetration firestop and joint systems.

INSS1440 Fire Barrier Caulk

Testing

ASTM E814 up to 3 hr F&T Rating

UL 1479 up to 3 hr F&T Rating
L Rating at Ambient - Less than 1 cfm/sq. ft.

ULC S-115 up to 3 hr F Rating
up to 2 hr FT Rating
up to 3 hr FH Rating
up to 2 hr FTH Rating
L Rating at Ambient - Less than 5.1 L/S/m2

FM Approved

CNS 14514 up to 3 hr Class A&B

GB 23864

ASTM E84 - Flame 5 Smoke 20

ASTM E662 & FAR 25.853

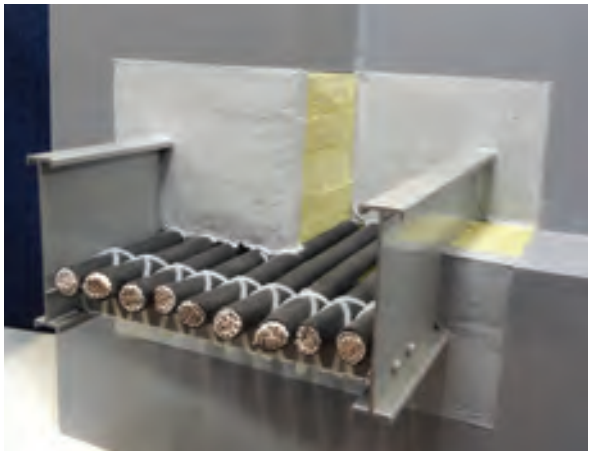

Installation guide:

1. Refer to applicable certification directory or www.paintoprotect.com for listed assemblies.
2. Ensure application area is clean and free of oil, loose dirt, rust or scale and is dry and frost free.
3. Install the correct depth and compression of backing material, if required, as detailed within the applicable Listed system, allowing for sufficient depth of fill material.
4. Using a caulking gun, trowel or putty knife, apply INSS1440 fire barrier caulk into the seams, gaps or voids between forming material and floor or wall surface.
5. Tool the sealant surface smooth using a putty knife dipped in water, making complete contact with substrates to ensure an air and smoke tight seal.
6. Clean up, as necessary, with water.
7. INSS1440 fire barrier caulk cures by water evaporation and is not recommended for use in a wet environment.

INSS2460 & INSS2460+

Applications

Description

Industry Leading Firestop Technology INSS2460 Fire Barrier Silicone Sealant is a one-part, neutral-curing silicone sealant used to control the spread of fire, smoke, toxic gases, and water during fire conditions. INSS2460 offers exceptional performance and listed designs require less product, making it more cost effective than other traditional firestop silicone sealants.

INSS2460 is designed to seal the gaps around penetrations through fire-rated floors, walls or other assemblies as well as for sealing gaps around window and door frames in critically fire-rated structures.

INSS2460+ is a sprayable silicone based firestop sealant that offers excellent flexibility, is waterproof and tested for up to a 3 hour joint system in accordance with UL2079 and ULC-S115.

Both products adheres to most construction materials including concrete, stone, plaster, metals, glass and plastics. They are installation friendly, are asbestos and halogen free and ideal for interior and exterior use or where contact with moisture is a concern. Once fully cured, INSS2460/INSS2460+ offer excellent weathering characteristics including UV resistance, cold temperature flexibility, dry heat aging and resistance to chalking.

Specifications

Specific gravity:	**1.2 - 1.3g/cm^3**
Color:	**Gray**
VOC:	**53.20 g/L**
STC:	**64**
Tack-free time:	**30 minutes**
Curing time:	**7-14 days**
Shrinkage (weight):	**0.1%**
Hardness (fully cured):	**SHORE A 30° - 40°**
Application temperature:	**40° F - 104° F (5° C - 40° C)**
In-Service temperature:	**-13° F - 176° F (-25° C - 80° C)**
Storage temperature:	**50° F - 95° F (10° C - 35° C)**
Shelf Life:	**12 months**
Packaging:	**INSS2460-** **310 ml/Tube,** **25 Tubes/CTN** **20 fl. oz./Sausage,** **20 Sausages/ CTN** **INSS2460+** **1 gal/pail & 5 gal/pail**
Performance:	**50+ years HOAC tested**

Fill, void or cavity material.
For use in through-penetration firestop and joint systems.

INSS2460 & INSS2460+

Limitations

Not for use in areas immersed in water. The sealant can only be removed mechanically once cured.

This product is NOT intended for use in fire rated construction.

Installation guide:

1. Refer to applicable certification directory or www.paintoprotect.com for listed assemblies.
2. Prior to applying, clean the surface of the opening and any penetrating items to allow for proper adhesion. Use mineral spirits or similar product to clean surfaces (Do not use alcohol). Ensure that the surface of the substrates is dry and frost free.
3. Install the correct depth and compression of backing material, if required, as detailed within the applicable Listed system.
4. INSS2460 can be installed with a caulking gun, putty knife or trowel. INSS2460+ can be applied by airless sprayer.
5. Install the applicable depth of INSS2460/INSS2460+ into the opening flush with the surface of the substrate, or as detailed within the Listed system to meet the required assembly rating.
6. Tool the sealant surface smooth using a putty knife dipped in water making complete contact with substrates to ensure an air and smoke tight seal.
7. Using mineral spirits, clean all tools and flush spray equipment immediately after use.

Testing

INSS2460

UL 1479 up to 3hr T, F and L Rating
ULC S-115 up to 3hr FTH Rating
CNS14514 3hr Class A and B
FM approved
GB23864
ASTM E84 - Flame 5 Smoke 45
ASTM E662 & FAR 25.853
ASTM D412 - 265% Elongation 42% Compression
ASTM C719 - Cyclic Joint Movement 50%
ASTM C793 - Accelerated Weathering

INSS2460+

UL 2079
ULC S -115

INSS1186 Elastomeric FireCaulk

Applications

Description

Industry leading Firestop Technology, INSS1186 Elastomeric FireCaulk is a water based acrylic elastomeric fire rated caulk that offers excellent fire protection and flexibility, even after full curing.

Curtain Wall

INSS1186 is tested in accordance with ASTM E2307 providing a 3hr fire rating and 2 hr smoke rating on 100% vision glass curtain wall.

Joint Systems

INSS1186 is also tested in accordance with UL 2079 and ULC S-115 for use in dynamic construction joint system, such as Head of Wall, Wall to Wall, Floor to Wall and Floor to Floor joints.

INSS1186 can be applied by brush, bulk caulking gun, trowel or airless sprayer. It is compatible with and adheres to common construction materials and withstands compression and extension in dynamic joints.

INSS1186 Elastomeric FireCaulk is a water based, low VOC, halogen, asbestos and organic solvent free product.

Meets the intent of LEED® VOC environmental air quality requirements.

Specifications

Density:	**1.5±0.1 g/cm^3**
Solid Content (by weight):	**75%**
VOC:	**4 g/L**
STC:	**63**
Dry to Touch:	**30 minutes**
Curing Time:	**3-7 days depending on thickness and ambient conditions.**
Application Temp:	**40° F - 104° F (5° C - 40° C)**
In-Service Temp:	**-13° F - 176° F (-25° C - 80° C)**
Shelf life:	**24 months**
Maximum cyclic displacement:	**±12.5%**
Storage Temperature:	**50°F - 95° F (10° C - 35° C)**
Packaging:	**20 fl. oz./Sausage, 20 Sausages/CTN**
	310ml/ tube, 25 Tubes/ CTN
	1 G/Pail, 5G/Pail
Performance:	**50+ years HOAC tested**

Fill, void or cavity material. For use in through-penetration firestop and joint systems.

INSS1186 Elastomeric FireCaulk

Testing

ASTM E2307 3hr F Rating 2hr T Rating at 8" Nominal Joint

+/- 5% vertical and +/-12.5% horizontal Cyclic Movement

ANSI/UL 2079 3 hr Rating at 4" Nominal Joint

L Rating At Ambient — Less Than 1 CFM/ Lin Ft

CAN/ULC S 115 3 hr FTH Rating at 4" Nominal Joint

L Rating at Ambient - Less than 1.55 L/S/m2

ASTM C 719 Cyclic Movement 12.5%

Movement capability 8% compression or extension (Class II or III)

ASTM D4587 Extended Weathering

ASTM-E84 Flame 0 Smoke 5

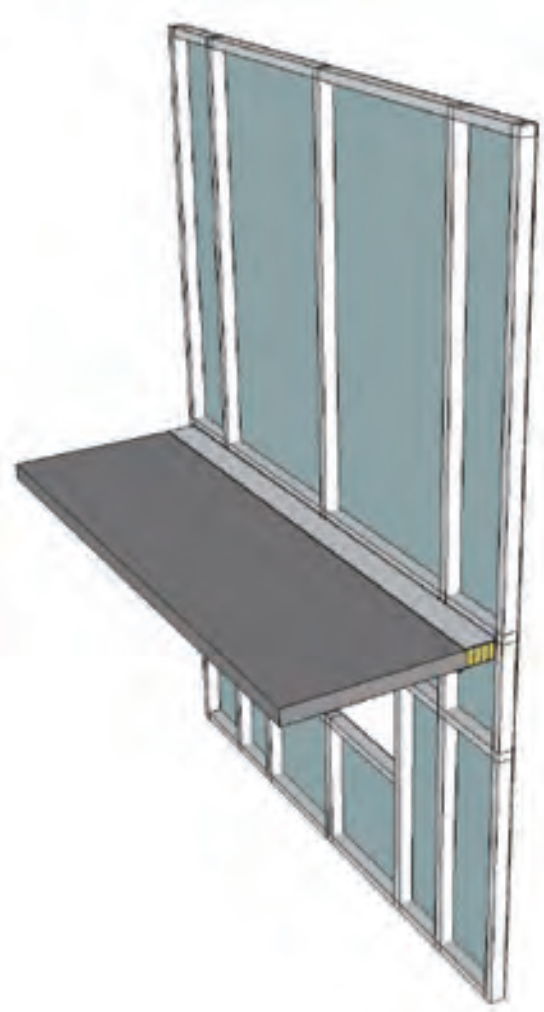

Installation guide:

1. Refer to applicable certification directory or www.painttoprotect.com for listed assemblies and specific installation instructions.
2. Remove surface contaminants such as dirt, oil, rust or other previous adhesive, to ensure a clean surface for excellent adhesion.
3. Mineral wool batt may be required in joint systems. Install min 64 kg/m3 (4 pcf) mineral wool batt insulation in joint opening as a permanent form. Install edge-first into joint opening, parallel with joint direction, such that batt sections are compressed min 60 percent in thickness and flush with bottom surfaces of the floor.
4. Using airless sprayer or brush, apply required wet thickness of INSSS1186 to completely cover top surface of mineral wool and lap additional 2 mm (5/64 in.) thick by min 25 mm (1 in.) onto each edge of substrate. Product can be applied to vertical or horizontal surfaces. To avoid sag when applied to vertical surfaces, install 2-3 thinner applications until required depth is achieved, allowing it to cure slightly between coats.
5. Trowel by using a mason's trowel or putty knife as needed.
6. Full curing may take 3-7 days, depending on the applied thickness and ambient condition. Avoid contact with moisture prior to full curing.

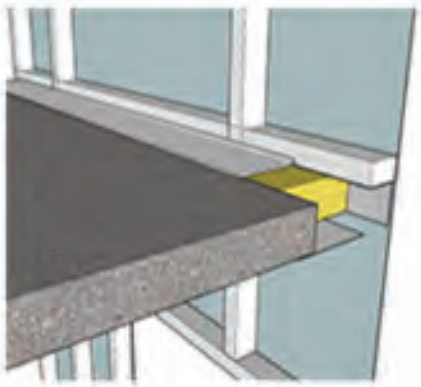

FM012 Firestop Putty

Applications

Description

FM012 Firestop Putty is an industry leading elastomeric paste, with fast reacting intumescent properties, designed to seal gaps around throughpenetrations and block the passage of flame, toxic fumes and smoke. FM012 Firestop Putty's Listed designs offer exceptional performance and use less product, making it more cost effective than other traditional firestop putties.

FM012 Firestop Putty is used to protect penetrations such as cable bundles, conduits, metallic pipes, plastic pipes, busways and air ducts with up to a 3-hour fire resistance rating.

FM012 is highly intumescent, offers rapid expansion and high volume char, has excellent elasticity, is easy to install and will not sag in vertical applications. Completely halogen and asbestos free, it does not contain organic solvents.

Meets the intent of LEED® VOC environmental air quality requirements.

Specifications

Density:	**1.35-145 g/cm3**
Color:	**Red**
VOC:	**11.50 g/L**
Curing Time:	**7-14 days**
Application Temp:	**40° F - 104° F (5° C - 40° C)**
In-Service Temp:	**-13° F - 176° F (-25° C - 80° C)**
Storage Temp:	**50° F - 95° F (10° - 35° C)**
Shelf life:	**24 months**
Package:	**310 ml/Tube; 25 Tubes/CTN** **20 fl. oz./Sausage** **20 Sausages/CTN** **5Kgs/Pail, 20Kgs/Pail**
Performance:	**50+ years HOAC tested**

Fill, void or cavity material.
For use in through-penetration firestop and joint systems.

FM012 Firestop Putty

Testing

ASTM E 814 2hr F and T Rating

UL 1479 2hr F and T Rating

FM Approved

ASTM E84 Flame 0 Smoke 25

CNS 14514 3hr Class A

GB 23864

ASTM E662

Installation guide:

1. Refer to applicable certification directory or www.paintoprotect.com for listed assemblies.
2. Ensure application area is clean and free of oil, loose dirt, rust or scale and is dry and frost free.
3. Install the correct depth and compression of forming material, if required, as detailed within the applicable Listed system. Allow for sufficient depth of fill material.
4. Using a caulking gun, trowel or putty knife, apply FM012 into the seams, gaps or voids between the penetrant and edge of annular space.
5. Tool the sealant surface smooth using a putty knife dipped in water, making complete contact with substrates to ensure an airtight/smoke tight seal.
6. Clean application tools with water.
7. FM012 firestop putty cures by water evaporation. It is not recommended for use in a wet environment.

INSS0285 Smoke & Acoustic Sealant

Applications

Description

INSS0285 is a high performance acrylic based sealant for sealing construction joints and through penetrations in non fire-rated assemblies.

Applications

Reducing the transmission of sound through wall openings.
Stopping the passage of smoke in smoke barrier walls.
Stopping air leakage to reduce the passage of dust and airborne infectious particles.

Features

- Low VOC, single component
- Excellent caulking and spraying properties
- Silicone, halogen, asbestos and solvent free.
- Excellent airborne sound insulation.
- Smoke and fume resistant.
- Easy clean up with water.
- Low volume shrinkage.
- Paintable.

*Available in caulking and sprayable grades.

Technical Data

Color	White
Chemical basis	Water based acrylic dispersion
Density	1.6 ± 0.1 g/cm3
Skin-forming time	Approx. 25 min
Curing time	3mm/3days (@ 25°C/ RH50%)
Elongation at break	300%
Typical thickness temperature	1mm WFT = 0.7mm DFT
Application temperature	40° F - 104° F (5° C - 40° C)
In-Service Temperature	-13° F - 176° F (-25° C - 80° C)
Storage Temperature	50° F - 95° F (10° C - 35° C)
Mold and mildew (ASTM G21)	Mold resistant (Class 0)
Volume Shrinkage(ASTM C1241)	22.3%
VOC	42g/L
Surface burning characteristics UL 723 (ASTM E84)	Flame spread: 0 Smoke development: 5
STC Rating	63 (per construction type)
Packaging	310ml/Tube; 25Tubes/CTN
	20 fl. oz./Sausage; 20 Sausages/CTN
	5Gal./Pail (SPRAYABLE)

INSS0285 Smoke & Acoustic Sealant

Installation Guide (Caulking Type)

1. Application substrate should be cleaned of loose debris, dirt, oil, wax, grease and other contaminants the surface must be moisture and frost free.
2. Install backing material as needed. The depth of the joint should be 1/4" (6 mm) minimum to 3/8" (9 mm) maximum.
   Sealant can be applied with standard or bulk caulking guns,manual trowel or spray application. Apply sealant in opening and work into all areas eliminating voids or seams and making complete contact with substrate.

Spraying guide (Spray Type)

1. Mix INSS0285 SPRAY thoroughly using a power agitator before application. Thinning is normally not required, if necessary, use potable water (3% max.) to adjust viscosity.
2. Apply via airless spray equipment in a single pass not more than 1mm WFT to prevent sagging.
3. Recommended sprayer:
   Model: Graco 1095 (3300psi)
   Filter in machine: 60 mesh
   Filter in spray gun: 100 mesh
   Tip: 517~523
4. Recommended application temperature shall be between 5~40°C (40~104°F).
5. Do not allow the sealant material to remain in hoses, gun or spray equipment when not in use. Clean all equipment with water immediately after use.
6. All unused sealant should be stored in tightly closed container. Surface skinning may occur in a partially filled container in which case filter the material prior to use.
7. Wet film thickness approx.1mm cures to 0.64mm dry film. Thickness measurement - wet film thickness of sealant layer can be measured using a wet film thickness gauge. The dry film thickness can be verified using calipers or micrometers.

Limitations

- Not for use in areas immersed in water. The sealant can only be removed mechanically once cured.
- This product is NOT intended for use in fire rated construction.

FM011 Moldable Firestop Putty

Applications

Description

FM011 Moldable Firestop Putty is an industry leading, one-part, flexible, intumescent putty ready-to-use for wall or floor openings containing cable trays, cable bundles, plastic pipes and/or conduits providing up to a 3-hour fire resistance rating.

Highly intumescent, and providing rapid expansion and high volume char, FM011 will control the spread of fire, smoke, gases and heat transfer. Its superior elasticity makes FM011 easy to install.

FM011 Moldable Firestop Putty is halogen, asbestos and organic solvent free, will not coagulate and is re-penetrable and reusable. It provides excellent adhesion to a full range of construction substrates and penetrants.

Meets the intent of LEED® VOC environmental air quality requirements.

Specifications

Specific Density:	**Approx. 1.25 - 1.35 g/cm^3**
Color:	**Black**
VOC:	**16.1 g/L**
STC:	**64**
Installation Temp:	**40°F - 104°F (5°C - 40°C)**
In-Service Temp:	**-13° F - 176° F (-25° C - 80° C)**
Storage Temp:	**50° F - 95° F (10° C - 35° C)**
Elasticity:	**> 40%**
Expansion Temp:	**220° C**
Expansion Rate:	**5-10 Times**
Shelf life:	**24 months**
Packaging:	**10 pcs/CTN (2kg/pcs) (Pads) 20kgs 12 pcs/CTN (0.4kg/pcs) (Bars) 4.8kgs 1 Bar - 240mm x 40mm x 30mm (L x W x H) (Coverage: 17.57 inch^3) 1 Pad - 300mm x 400mm x 15mm (L x W x H) (Coverage: 109.84 inch^3)**
Performance:	**50+ years HOAC tested**

Fill, void or cavity material.
For use in through-penetration firestop and joint systems.

FM011 Moldable Firestop Putty

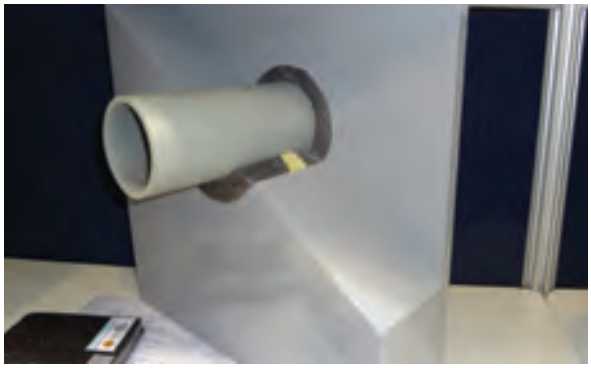

Testing

UL 1479 3hr F & T Rating
L Rating at Ambient - Less than 1 cfm/sq ft.

ASTM E814 3hr F & T Rating

CAN/ULC S115 2hr FTH Rating

FM Approved

CNS 14514 3hr Class A & B

GB23864

ASTM E84 Flame 0 Smoke 5

ASTM E662 & FAR 25.853

Installation guide:

1. Refer to applicable certification directory or www.paintoprotect.com for listed assemblies.
2. Ensure application area is clean and free of oil, loose dirt, rust or scale and is dry and frost free.
3. Install the correct depth and compression of backing material, if required, as detailed within the applicable UL, FM or CNS listed system.
4. Simply tear off required amount of putty and plug into the gap or void around the penetrants.
5. Smooth by hand, making complete contact with the substrates to ensure an airtight/smoke tight seal

Putty Pad

Applications

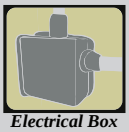

Electrical Box

Description

Putty Pad is a moldable fire-rated intumescent putty material. When exposed to heat or flame Putty Pad's quickly form a carbon char barrier which prevents the spread of flames, smoke, and toxic gases through openings in fire rated walls and partitions. Putty Pad is specifically designed to protect openings created by electrical boxes to restore up to 2-hours of fire resistance. Available in 9" X 9" pads for quick, easy install and can be cut to fit or ganged up to meet various sized electrical boxes.

Characteristics and Features

- Easily installed by hand, reusable and re-penetrable
- Wall opening protective tested up to 2 hours in accordance with UL 1479 (category CLIV)
- Single & multi-gang metallic boxes up to 14" (356 mm) long
- Plastic & steel faceplate's
- 1 & 2 hr wood or steel stud walls
- Provides draft and smoke seal
- Excellent sound insulation properties
- Non-halogenated, Asbestos free, Low VOC
- Highly intumescent when exposed to fire

Properties

Color:	**Black**
Appearance:	**Semi-Solid, moldable**
Thickness:	**3/16"(5mm)**
Expansion rate:	**5~10 times**
Percent Solids:	**100%**
VOC:	**0 g/L (0%)**
Storage Temperature:	**5°C (41°F) to 45°C (113°F)**
Application Temperature:	**-10°F (-23 ° C) to 120°F (49°C)**
Mold and Mildew(ASTM G21):	**No Growth**
ASTM E84:	**0 Flame 0 Smoke**
STC Rating (ASTM E90):	**63 (per construction type)**

Storage and Handling

Putty Pad should be stored between 41°F(5°C)~113°F(45°C) in dry locations and under protective cover in their original container. Putty Pads have a minimum 2 year shelf life. If product freezes, thaw and examine completely before use.

Limitations

Not intended for continuous use underwater Do not immerse in organic solvent.

Packaging

9.00" x 9.00" x 3/16" (229 x 229 x5mm)/Pad, 20 Pads/Ctn

Fill, void or cavity material.
For use in through-penetration firestop and joint systems.

Putty Pad

Installation Instruction

Putty Pad for use with UL Listed Metallic Outlet Boxes installed with plastic or steel cover plates in 1 or 2 hr fire rated gypsum board wall assemblies framed with min 3-1/2 in. wide wood or steel studs and constructed as specified in the individual U300, U400, V400, or W400 Series Wall and Partition Designs in the Fire Resistance Directory.

Always refer to applicable local building regulations to ensure the listed system details are applicable.

Surfaces to be covered must be clean. Oil, grease, and dirt should be removed with dry rags prior to putty pad installation. To ensure adhesion thesubstrate must be dry and frost free.

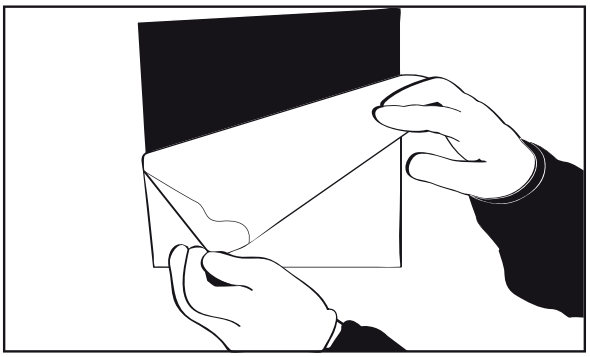

Remove film from putty pad

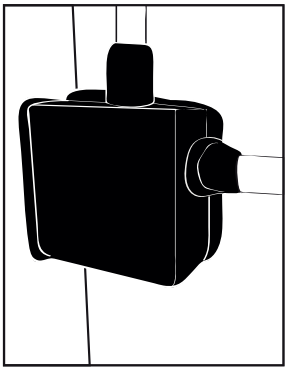

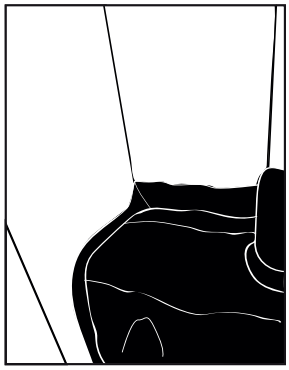

If gypsum board is installed, pack putty into gaps between box and gypsum board slightly overlapping inner wallboard surface. If gypsum board is to be installed after pad installation, overlap front edge of box so that putty will be compressed around edges of box as gypsum board is installed. Cut slits in pad to fit around conduit or cables.

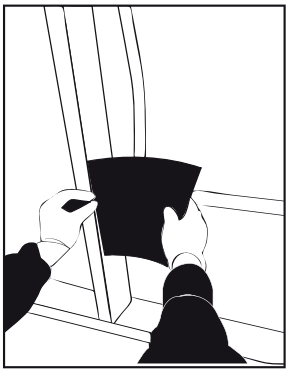

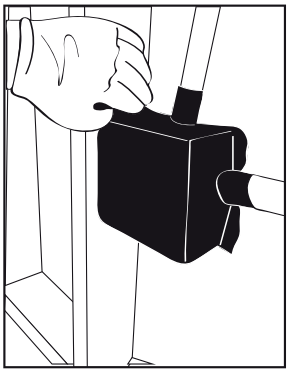

Apply the pad to the stud side of the box partially overlapping the stud and press to adhere. Smooth the pad across the box to the opposite side, overlapping around all sides. Ensure complete contact with all sides and penetrating items.

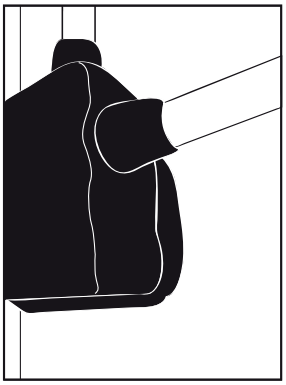

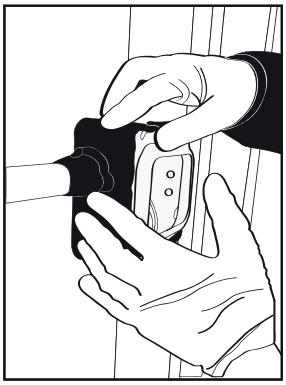

Press pad to surface of top, bottom and sides of box.

INFS0812
Intumescent Strip

Applications

Description

INFS0812 Intumescent Strips are quickly and easily installed providing a convenient solution for firestop contractors. Providing high expansion rate and volume means that the INFS0812 design requires less strips to seal the openings, making it more cost effective than other traditional firestop intumescent strips.

INFS0812 Intumescent Strips expand when heated and maintain a tight seal. When used with combustible penetrants such as plastic pipe, INFS0812 blocks the spread of fire, smoke, toxic gases, even as the penetrant is consumed by fire.

INFS0812 Intumescent Strips are also used in conjunction with our SSCI Firestop Collar to tightly seal any opening that is created as a combustible item is consumed by fire.

Meets the intent of LEED® VOC environmental air quality requirements.

Specifications

INFS0812:	**5mm x 60mm x 2M**
Color:	**Black**
Expansion rate:	**≥20 times**
L.O.I:	**≥40**
In-Service Temperature:	**-13° F - 176° F (-25° C - 80° C)**
Storage Temperature:	**40° F to 104° F (5° C to 40° C)**
Environmental Aging as per UL 1479:	**Pass**
Accelerated aging (158± 5°F for 270 days)	**Pass**
High humidity (97-100% RH & 95 ± 3°F for 180 days)	**Pass**

Fill, void or cavity material.
For use in through-penetration firestop and joint systems.

INFS0812
Intumescent Strip

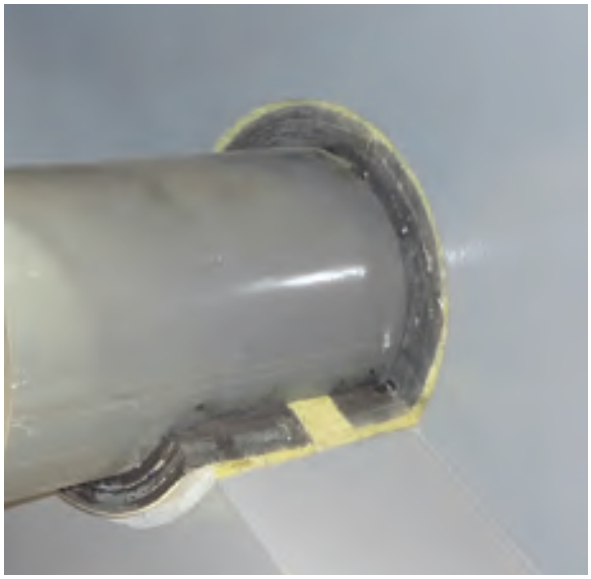

Testing

ASTM E 814 up to 3 hr F and T Ratings

UL 1479 3 hr F and T Ratings
L Rating at Ambient - Less than 1 cfm/sq. ft.

CAN/ULC S115 2 hr FTH Ratings
Meets 50 Pa requirement

FM Approved

ASTM E 84 - Flame 0 Smoke 0

CNS 14514 3 hr Class A and B

GB 23864

ASTM E662 & FAR 25.853 (1998)

Installation guide:

1. Refer to applicable certification directory or www.painttoprotect.com for listed assemblies.
2. Ensure application area is clean and free of oil, loose dirt, rust or scale.
3. **If Required** - Install min 4 pcf (64 kg/m3) mineral wool batt insulation firmly packed into opening as a permanent form, as detailed in Listed system.
4. The required number of layers of wrap strip are to be individuallyand tightly wrapped around each nonmetallic through penetrant and secured together by means of AL-foil tape.
5. Wrap strip shall be butted against floor bottom or both surfaces of wall, or as detailed in Listed assembly.
6. Seal penetration against smoke using INSS1440 or INSS2460 Sealants.

International Fireproof Technology, Inc.
17528 Von Karman Ave. Irvine, CA 92614

Office: 949-975-8588
Web Site: www.painttoprotect.com
Email: ptp@painttoprotect.com

SSCI Firestop Collar

Applications

Description

Industry leading Firestop Technology, SSCI Firestop Collar is a stainless steel collar intended to be used in conjunction with INFS0812 Intumescent Strip to tightly seal any opening that is created as a material is consumed by fire. This combination will restore the fire resistance rating of walls, floors and seals against the passage of flames, toxic fumes and smoke. INFS0812 Strip and SSCI Firestop Collar are designed to make installation quick and easy.

SSCI and INFS0812 Fire designs require less product and offer exceptional performance, making SSCI and INFS0812 more cost effective than other traditional firestop collars and strips.

SSCI is intended for penetrating items such as non metallic pipes, plastic pipe, and insulated pipes.

Specifications

In-Service Temperature: **-13° F - 176° F (-25° C - 80° C)**

Storage Temperature: **40° F - 104° F (5° C - 40° C)**

Performance: **50+ years HOAC tested**

SSCI is available in all standard pipe sizes or in a bulk kit that can be cut to be fitted on site by the applicator.

Nominal size of pipe	2"	3"	4"	5"- 6"	7"- 8"	9" - 12"
Required Strips	1	2	2	3	3	4
Collar width (mm)	60	60	60	60	80	120
Number of anchor tabs	3	3	4	6	6	8

Fill, void or cavity material.
For use in through-penetration firestop and joint systems.

SSCI Firestop Collar

Testing

ASTM E 814 up to 3 hr F and T Ratings

UL 1479 3 hr F and T Ratings

L Rating at Ambient - Less than 1 cfm/sq. ft.

CAN/ULC S-115 2 hr FTH Ratings

Meets 50 Pa requirement

FM Approved

ASTM E 84 Flame 0 Smoke 0

CNS 14514 3 hr Class A and B

GB 23864

ASTM E662 & FAR 25.853

Installation guide:

1. Refer to applicable certification directory or www.paintoprotect.com for listed assemblies.
2. Ensure application area is clean and free of oil, loose dirt, rust or scale.
3. Release hose clamp screw and disassemble the SSCI-X Firestop Collar.
4. Individually or continuously wrap the required number of wrap strips around penetrant and hold in place with AL foil tape.
5. Wrap strip shall be butted against floor bottom or both surfaces of wall.
6. Install SSCI collar around wrap strips and secure with hose clamp.
7. Install the required number and type of anchors as detailed in the listed system.

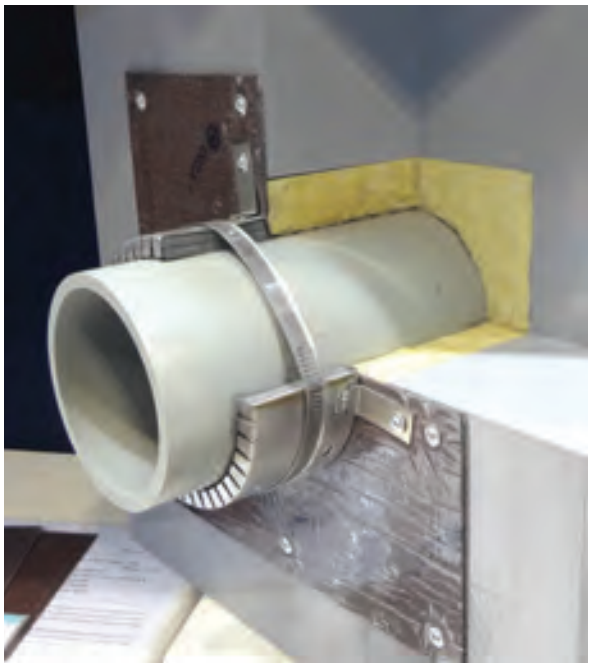

FP-02 Firestop Sheet

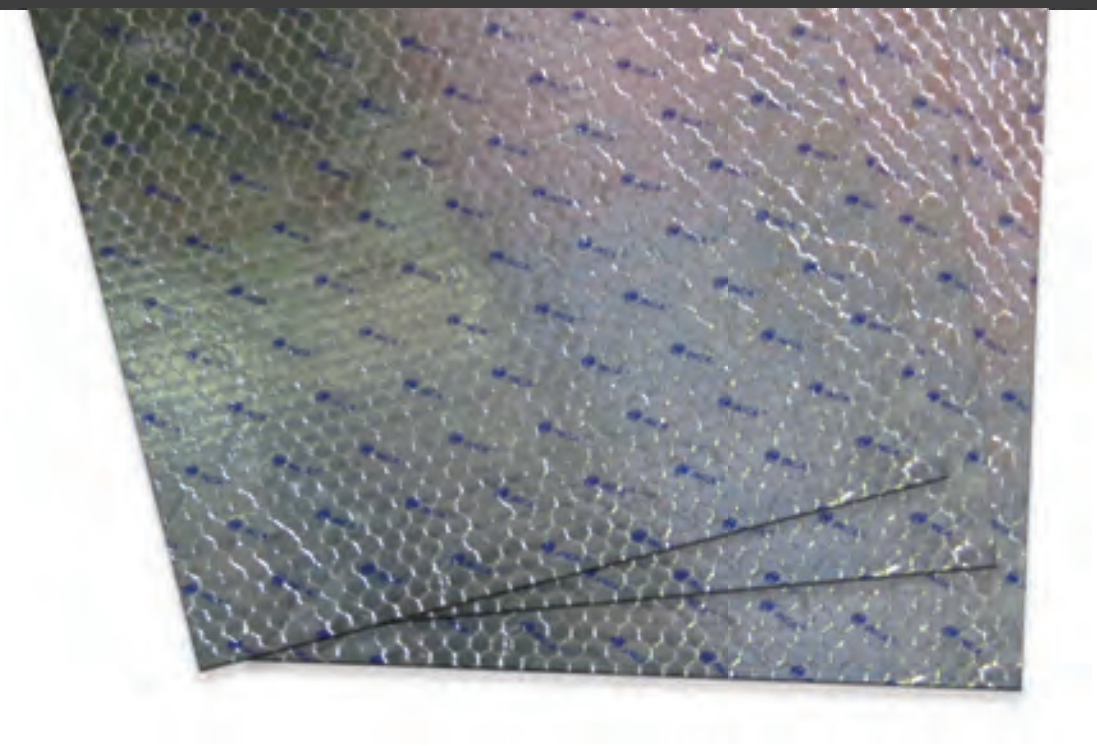

Applications

Description

FP-02 is an industry leading Firestop Sheet fabricated by bonding proprietary intumescent materials to a metal sheet. FP-02 securely blocks flame and is designed to seal large penetrations through fire-rated walls and floors. It is also used for shielding cable trays, conduit, HVAC and vital process equipment from radiant heat, flame spread and smoke.

FP-02 Firestop Sheet steel backer provides structure to the assembly making a safe firestop solution for floor openings. Easily re-penetrable and repairable with a common hole saw, it is the most cost effective solutions for large openings on the market today.

FP-02 Firestop Sheet is easily trimmed to different sizes to fit any installation or large openings and works with nearly all construction materials. It is halogen and asbestos free, is very stable and maintenance free.

Meets the intent of LEED® VOC environmental air quality requirements.

Specifications

Size:	**90cm x 90cm**
Thickness:	**7.7 ± 1.3 mm**
Weight (per sheet):	**Approx. 13 Kg**
Expansion Rate:	**5 - 10 Times**
In-Service Temp:	**-13° F - 176° F (-25 °C - 80° C)**
Packaging:	**Single sheet**

Fill, void or cavity material.
For use in through-penetration firestop and joint systems.

FP-02 Firestop Sheet

Testing

ASTM E814 up to 2 hr F Rating

UL1479 2hr F rating

ASTM E84 - Flame 5 Smoke 90

CNS 14514 2 hr Class A & B

FM Approved

GB 23864

ASTM E662

Installation guide:

1. Refer to applicable certification directory or www.paintoprotect.com for listed assemblies.
2. Ensure application area is clean and free of oil, loose dirt, rust or scale.
3. When max opening dimensions exceed 20 in. (508mm) in both width and length, two minimum 2 x 2 in. (51 by 51 mm) by No.10 gauge galvanized steel angles shall be installed within the longest dimension of the opening, with one angle flush with both top or bottom of floor or both surfaces of wall. These angles provide a framing member for intermediate securement of the firestop sheet.
4. FP-02 Firestop Sheet is to be installed to lap a minimum of 2 in. (51 mm) on all sides of the through opening and with the aluminum foil facing against the surface of the floor (galvanized steel plate side outwards).
5. Apply a min 3/8 in. (10 mm) thickness of INSS1440 around the periphery of each firestop sheet prior to securing it to the floor or wall. In addition, min 3/8 in. (10 mm) bead of sealant applied at the periphery of the through penetrant/firestop sheet interface on both sides of the floor or wall.
6. FP-02 Firestop Sheet is to be secured to the top surface of floor using min 3/16 in. diam by 1-1/2 in. (5 mm by 38 mm) long steel expansion bolts in conjunction with min 1-1/4 in. (32 mm) diam steel fender washers. Max spacing of fasteners not to exceed 6 in. (152 mm) OC.
7. All wall openings require installation of FP-02 Firestop Sheet and putty/ sealant on both sides of the wall.

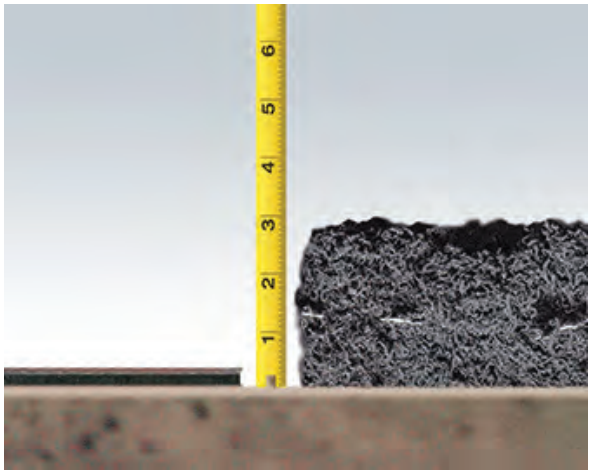

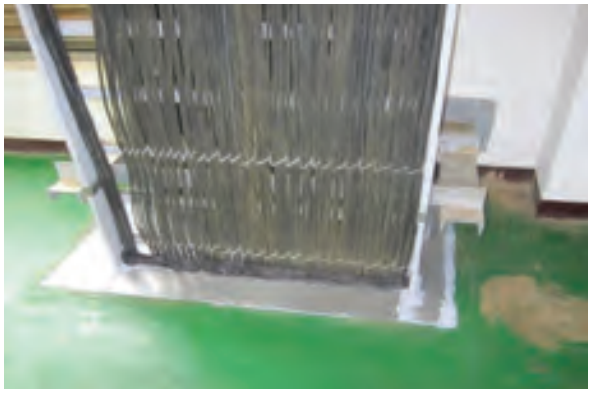

FP-04+ Firestop Sheet

Applications

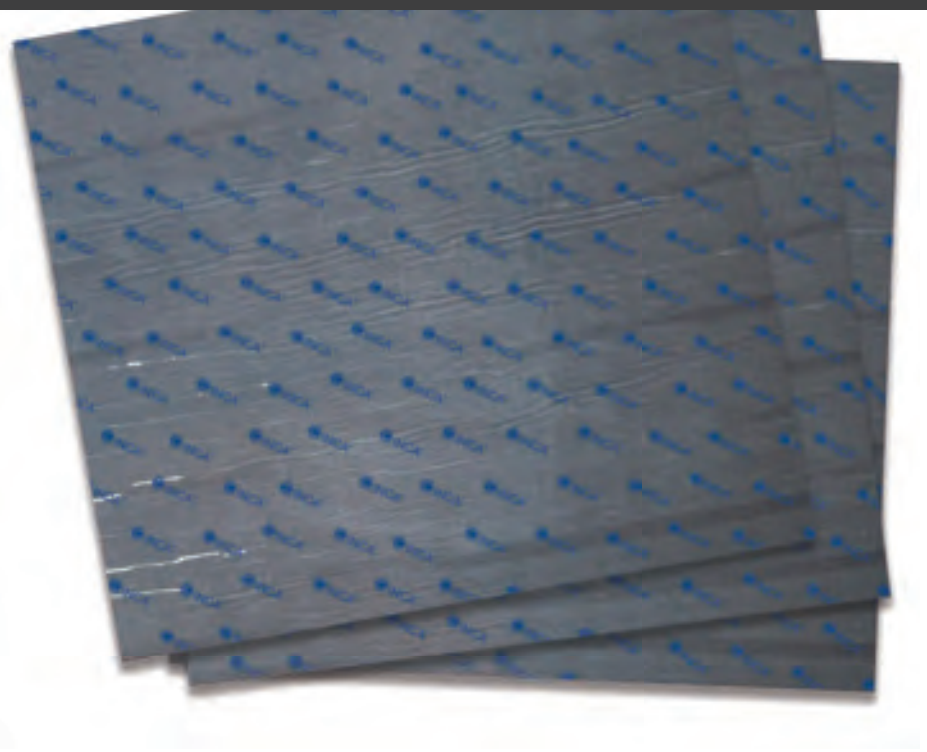

Description

FP-04+ is an industry leading Firestop Sheet fabricated by bonding proprietary intumescent materials to a metal sheet. FP-04+ securely blocks flame and is designed to seal large penetrations through fire-rated walls and floors. It is also used for shielding cable trays, conduit, HVAC and vital process equipment from radiant heat, flame spread and smoke.

FP-04+ Firestop Sheet is thinner than our FP-02, providing a more cost effective solution for double-sided applications such as walls. It is easily re-penetrable and repairable with a common hole saw and can easily be trimmed to different sizes to fit any installation or large openings, working with nearly all construction materials. It is halogen and asbestos free, is very stable and maintenance free.

Meets the intent of LEEDS® VOC environmental air quality requirements.

Specifications

Size:	**90 cm x 90 cm**
Thickness:	**≥ 2 mm**
Weight :	**7.8 Kg/Sheet**
Expansion rate:	**10 Times**
In-Service Temp:	**-13° F - 176° F (-25° C - 80° C)**
Packaging:	**4 Sheets per Pkg**
Largest Listed opening	**up to 74 square feet**
Performance:	**50+ years HOAC tested**

Fill, void or cavity material.
For use in through-penetration firestop and joint systems.

FP-04+ Firestop Sheet

Testing

ASTM E 814 up to 3 hr F and T Rating

UL 1479 3 hr F and T Rating

L Rating at Ambient - Less than 1 cfm/sq ft.

ULC S-115 up to 3 hr F Rating

Up to 1 -1/2 hr FT Rating
Up to 3 hr FH Rating
Up to 1 hr FTH Rating
L Rating at Ambient – Less than 5.1 L/Sm^2

ASTM E84 Flame 5 Smoke 90

FM Approved

CNS 14514 3 hr Class A&B

GB 23864

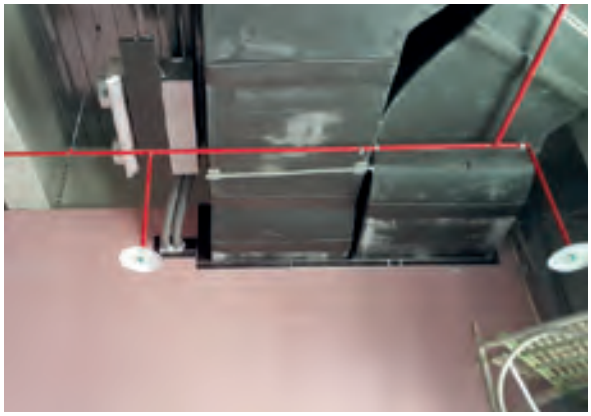

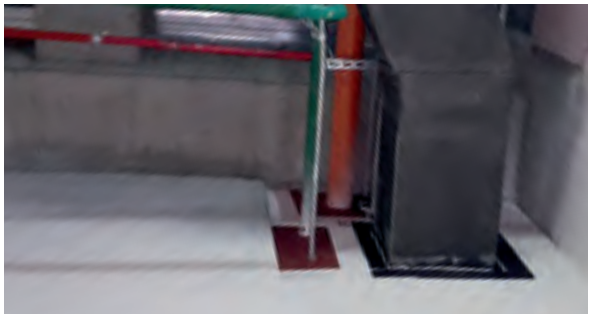

Installation guide:

1. Refer to applicable certification directory or www.paintoprotect.com for listed assemblies.
2. Ensure application area is clean and free of oil, loose dirt, rust or scale.
3. When max opening dimensions exceed 20 in. (508mm) in both width and length, two minimum 2 x 2 in. (51 by 51 mm) by No.10 gauge galvanized steel angles shall be installed within the longest dimension of the opening, with one angle flush with both top and bottom of floor or both surfaces of wall. These angles provide a framing member for intermediate securement of the firestop sheet at both surfaces of opening.
4. Cut sheet to an overall rectangular size such that it overlaps the floor or wall around the periphery of the opening according to Listed system. Cut sheet to fit the contour of the through penetrants within the opening.
5. Apply a min 3/8 in. (10 mm) thickness of INSS1440 around the periphery of each firestop sheet prior to securing it to the floor or wall. In addition, min 3/8 in. (10 mm) bead of sealant applied at the periphery of the through penetrant/firestop sheet interface on both sides of the floor or wall.
6. Install firestop sheet with intumescent bonded layer exposed, install sheet on both surface of wall or floor opening as per Listed system.
7. Secure sheet to wall of floor surface using the require number and spacing of fasteners as detailed in the Listed system.

FP05 Coated Firestop Board

Applications

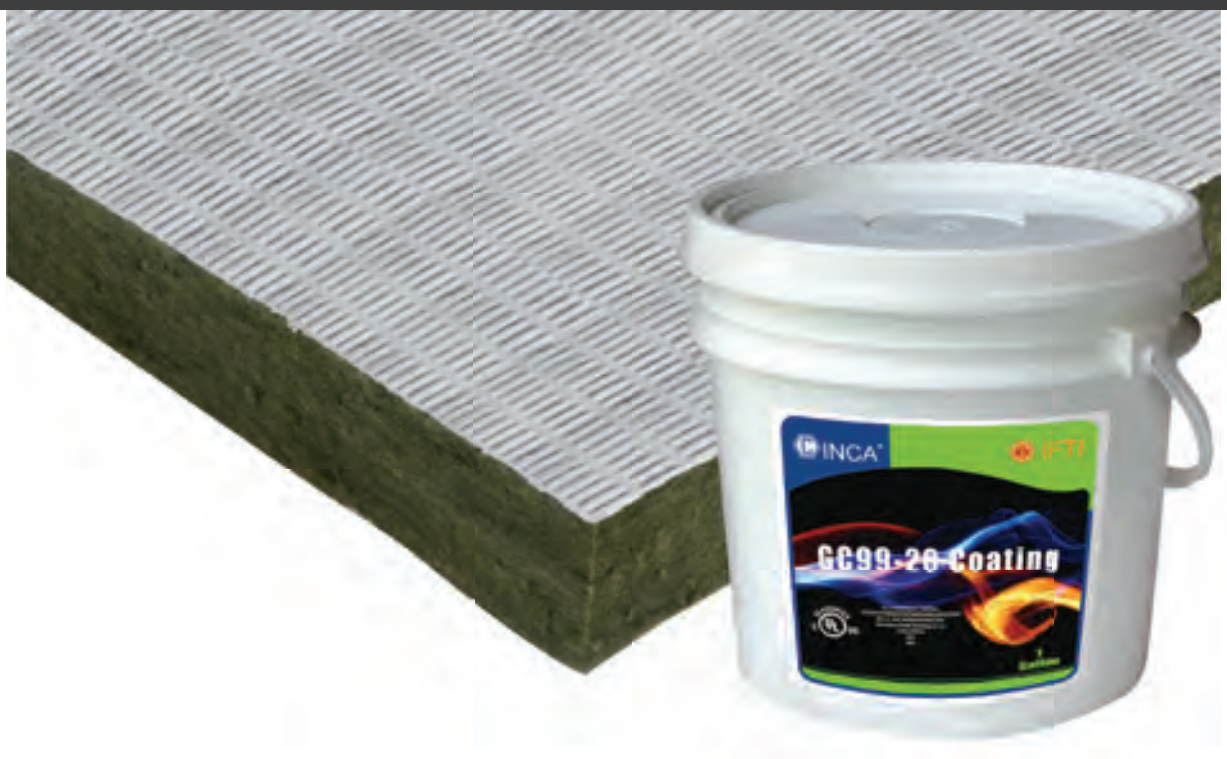

Description

Industry leading Firestop Technology, FP05 Coated Firestop Board is a 50mm thick high-density mineral fiberboard coated with GC99-20 Fireproof Coating used to create a fire barrier system, which can restore up to 2 hours fire rating. In case of fire, the coated surface of Firestop board will expand up to 30 times, reducing the spread of fire and smoke.

FP05 offers exceptional performance, is easily cut to fit on site and factory-metered doses of coating assure inspectors the correct amount has been applied, making FP05 more cost effective than other traditional firestop solutions.

FP05 is odorless, non halogenated and low VOC. When installed according to our Listed systems, it will restore the STC rating and provide an air-tight, smoke-tight firestop assembly.

Meets the intent of LEED® VOC environmental air quality requirements

Specifications

Color:	**White**
Size:	**1200 X 600X 50mm**
Bending Strength:	**≥0.1 Mpa**
Density:	**160Kg/m³**
In-Service Temp:	**-13° F - 176° F (-25° C - 80° C)**
Application Temp:	**40° F - 104° F (5° C - 40° C)**
Package (FP05)	**4 Pieces/Case**
Package(GC99-20)	**1Gal/Pail**

Fill, void or cavity material.
For use in through-penetration firestop and joint systems.

FP05 Coated Firestop Board

Testing

ASTM E814 2 hr F & T Rating

UL 1479 2 hr F & T Rating

CAN/ULC S-115 2hr FTH Ratings

FM Approved

ASTM E84

GB 23864

ASTM E662

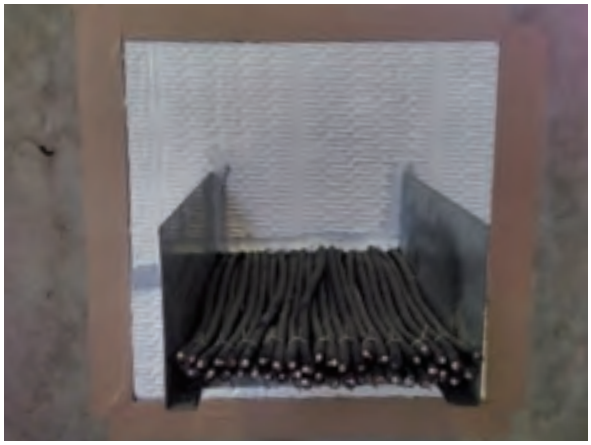

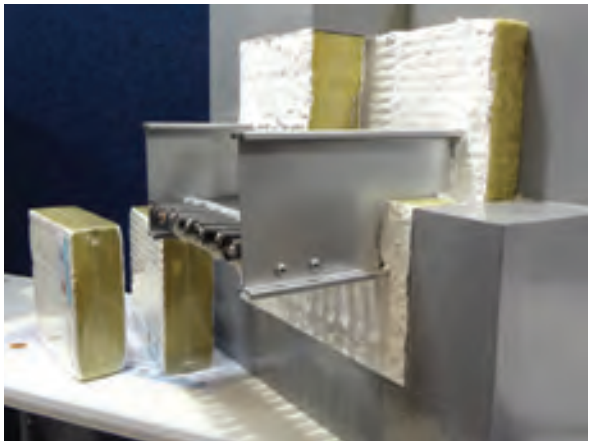

Installation guide:

1. Refer to applicable certification directory or www.painttoprotect.com for listed assemblies.
2. Clean surfaces of the opening and all penetration items to ensure adhesion. Opening must be dry, frost free and void of any grease and dust.
3. Minimum 1/8 in. (3.2 mm) wet thickness of INSS2460 shall be applied to the interior surfaces of the opening to a min height of 1-1/2 in. (38 mm) on both sides of the floor or wall. Prior to the installation of FP-05, a min 1/8 in. (3.2 mm) wet thickness of sealant applied to the cut edges of the FP-05.
4. Cut FP-05 to fit the contour of the opening and penetrating item and friction fit into the opening on both sides of the floor or wall. Install flush with both surfaces of the floor or wall assembly.
5. Apply min 1/8 in. (3.2 mm) thickness of sealant at the interface of the interior concrete surfaces and the FP-05, over the interior seams of the coated batts and at point contact location between the penetrant and the substrate on both sides of the floor or wall

CFS01 Mortar

Applications

Description

CFS01 Mortar is an industry leading non-intumescent firestop mortar comprised of a proprietary blend of gypsum and cement. CFS01 Mortar is designed with installation convenience in mind. Our "Variable Viscosity" technology allows the installer to add less water for a thicker consistency or more water for a thinner consistency, depending on the application needs. CFS01 Mortar provides up to 3 hours fire rating to prevent passage of flame, smoke, and toxic fumes.

Per its mix ratios, CFS01 Mortar is the most cost effective mortar solution on the market.

It is typically used to seal mechanical and electrical service penetrations, blank openings and other large annular spaces in fire-resistance rated wall and floor assemblies with ratings up to 3 hour assembly testing.

CFS01 Mortar is non-shrinking, paintable, fast drying, safe, simple to use, halogen and asbestos free. Water and gas impermeable, it offers excellent structural strength while still being re-penetrable and repairable.

Meets the intent of LEED® VOC environmental air quality requirements.

Specifications

Mixing ratio by weight:	**(1 part mortar mix: 0.85 - 0.95 part water)**
Yield (per 20Kg):	**22-25L (1345 in^3 - 1525 in^3)**
Density (after mixing):	**1400-1650 kg/m^3 (Wet cast)**
Drying time:	**3 - 4 hours**
Time to remove backer (if required):	**2 days**
Fully cured:	**28 days**
Application Temperature Range:	**40° F - 104° F (5° C - 40° C)**
In-Service Temperature:	**-13° F - 176° F (-25° C - 80° C)**
Packing:	**20Kgs/Bag**
Shelf Life:	**3 years, when stored indoors in dry conditions in original unopened packaging**

Fill, void or cavity material.
For use in through-penetration firestop and joint systems.

CFS01 Mortar

Testing

ASTM E 814 up to 3 hr F and T Rating

UL 1479 3 hr F and T Rating

L Rating at Ambient - Less than 1 cfm/sq. ft.

GB 23864

CAN/ULC S-115 up to 3 hr FTH Rating

L Rating at Ambient - Less than 5.1 L/S/m^2

Installation guide:

1. Refer to applicable certification directory or www.paintoprotect.com for listed assemblies.
2. Clean surfaces of the opening and all penetration items to ensure adhesion. Opening must be dry, frost free and void of any grease and dust.
3. An appropriate backer must be installed first, as per Listed system, cut to fit below the opening to support the mix until it cures.
4. Mix with clean potable water in a proper container according to the mixing ratio (1 parts mortar mix: 0.85 - 0.95 part water), slowly adding the mortar into water while stirring by power mixer to ensure a smooth lump-free mix (Note: Do not add water into mortar). Mix well for 30-40 seconds. The wet mixture is best poured into the floor opening within 3 minutes after mixing.
5. Pour the wet mix into the opening, allowing for the proper depth of fill materials. If the first pouring depth is not sufficient, add more wet mix after the mortar is set.
6. Remove the backer after the mix has set if it is combustible. Noncombustible backers may remain in place.
7. Clean all tools and mixing containers with water immediately after using.

US110 Fire Barrier Foam

Applications

Description

Industry leading Firestop Technology, US110 Fire Barrier Foam is a two component foam, consisting of separate A and B liquid components which, when mixed, form a flexible medium-density fire retardant foam.

US110 Fire Barrier Foam is designed to seal large openings containing multiple penetrations such as cable bundles, cable trays and metallic pipes. Prior to foaming, the liquid components remain fluid, allowing effortless sealing of any size and shape opening, making the product quicker and more efficient than traditional firestop methods.

US110 Fire Barrier Foam's fast expansion technology quickly fills voids, offering excellent protection from fire, heat transfer, smoke and gases.

US110 Fire Barrier Foam offers unparalleled resistance to fire consumption, is halogen and asbestos free, durable and maintenance free.

Meets the intent of LEED® VOC environmental air quality requirements. requirements.

Specifications:

	US110 A	US110B
Color:	Gray	Brown
Packing:	12.25 Kg	7 Kg
Foaming time:	1 - 5 min.	
Optimum foaming temp:	68° F to 86° F (20° C - 30° C)	
Curing time:	24 hours	
Foam rate:	5 - 7 times	
L.O.I.:	> 32	
Storage temp:	59° F - 77° F (15°C - 25°C)	
In-Service temp:	-13° F - 176° F (-25° C - 80° C)	
Shelf life:	12 months	
Intumescent expansion rate:	2-5 times	
Mix ratio A:B	7-4 by weight	
Yield per kit:	134,750 cm^3 (depending on ambient conditions)	
Performance:	50+ years HOAC tested	

Fill, void or cavity material.
For use in through-penetration firestop and joint systems.

US110 Fire Barrier Foam

Testing

ASTM E 814 up to 2 hr F and T Ratings

UL 1479 2 hr F and T Ratings
L Rating at Ambient - Less than 1 cfm/sq. ft.

ULC S-115 up to 2 hr FH Rating
L Rating at Ambient - Less than 5.1 L/S/m^2

FM Approved

ASTM E 84 Flame 0 Smoke 25

CNS 14514 2 hr Class A and B

ASTM E662 & FAR 25.853

Installation guide:

1. Refer to applicable certification directory or www.paintoprotect.com for listed assemblies.
2. Areas to be protected must be clean and free of oil, loose dirt, rust or scale. Installation temperatures must be between 68° F - 86° F (20° C - 30° C).
3. Calculate amount of material required, based on the fact that a 19.25 kg kit yields 134,750 cm^3.
4. US110 is supplied as two part components (Parts A & B). Settling and separation during storage is expected, therefore both components must be stirred with a clean paddle or suitable power mixer prior to use.
5. Using a scale, weigh out and mix parts of US110A and US110B at a ratio of 7 - 4 . Mixing may be accomplished using a paddle mixer or other suitable power mixer in a container or by the use of automatic mixing and dispensing equipment. If paddle mixing is used, mix aggressively for 30 seconds.
6. Immediately pour mixed foam into the penetration. Product rises and cures in 1- 5 minutes depending on temperature.
7. Mechanical mixing and dispensing is recommended for large volume applications.

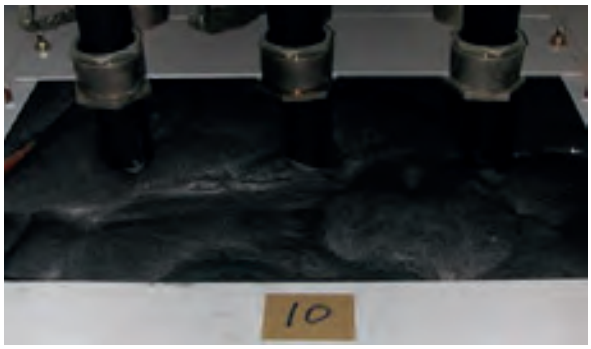

US150 Fire Barrier Foam

Applications

Description

Industry leading Firestop Technology, US150 Fire Barrier Foam is a two component medium density foam which, when mixed, forms a rigid-density fire retardant foam. US150 Fire Barrier Foam is designed for large openings containing single or multiple penetrations.

US150 Fire Barrier Foam's fast expansion technology quickly fills voids, and conforms to irregular shapes and sizes, offering excellent protection from fire, heat transfer, smoke and gases.

Repairable and re-penetrable, US150's rigid structure is easy to drill using common hole saws, ideal for irregular shaped openings that will require future penetrations.

US150 Fire Barrier Foam is low VOC, halogen and asbestos free, durable and maintenance free.

Meets the intent of LEED® VOC environmental air quality.

Specifications:

	US150 A	US150B
Color:	Black	Yellow
Packing:	14Kg/Pail 400 ml 2K Cartridge	6Kg/Pail 400 ml 2K Cartridge
Foaming time:	1 - 5 min.	
Optimum foaming temp:	68° F - 86° F (20° C - 30° C)	
Curing Time:	24 hours	
Foam rate:	2.5 - 4 times	
LO.I.:	≥32	
Storage temp:	59° F - 77° F (15°C - 25°C)	
In-Service temp:	-13° F - 176° F (-25° C - 80° C)	
Shelf life:	12 months	
Intumescent expan-sion rate:	4-8 times	
Mix ratio A:B	7-3 by weight	
Yield per kit:	60,000cm^3 (depending on ambient conditions)	
Performance:	50+ years HOAC tested	

Fill, void or cavity material.
For use in through-penetration firestop and joint systems.

US150 Fire Barrier Foam

Testing

ASTM E814 up to 2 hr F&T Rating

UL 1479 up to 2 hr F&T Rating

CNS 14514 up to 3 hr Class A&B

GB 23864

ASTM E662 & FAR 25.853

Installation guide for cartridge system:

(Clean all surfaces of the opening and penetrants before applying).

1. Hold the cartridge with the nozzle pointing upwards and pointing away from you then unscrew the cap.
2. Thread the static mixer onto the cartridge and screw securely.
3. Release the dispenser on applicator gun and pull back the piston rod.
4. Insert the cartridge in the dispenser.
5. Trigger the gun several times until the mixture in the mixer has a constant color. Discard the first few strokes.
6. Apply US150 to build up a seal by working from the back towards the front and bottom to top of the opening.
7. If necessary, install forming material at the back side or bottom side before applying.
8. Once the void is filled, excess foam may be trimmed flush with the surface of the wall or floor using a sharp knife or blade.

Installation guide:

1. Refer to applicable certification directory or www.paintoprotect.com for listed assemblies.
2. Areas to be protected must be clean and free of oil, loose dirt, rust or scale. Installation temperatures must be between 68° F - 86° F (20° C - 30° C).
3. Calculate amount of material required, based on the fact that a 20 Kg kit yields 60,000 cm^3.
4. US150 is supplied as two part components (Parts A & B). Settling and separation during storage is expected, therefore both components must be stirred with a clean paddle or suitable power mixer prior to use.
5. Using a scale, weigh out and mix parts of US150A and US150B at a ratio of 7 – 3. Mixing may be accomplished using a paddle mixer or other suitable power mixer in a container or by the use of automatic mixing and dispensing equipment. If paddle mixing is used, mix aggressively for 30 seconds.
6. Immediately pour mixed foam into the penetration. Product rises and cures in 1- 5 minutes depending on temperature.
7. Mechanical mixing and dispensing is recommended for large volume applications.

US 150 Firestop Brick

Applications

Description

US 150 Firestop Brick is a medium density, flexible polyurethane foam designed to firestop large openings containing various penetrants. Once exposed to fire US 150 is highly intumescent, this expansion provides a tight seal against the passage of flame, smoke and toxic gases.

US 150 can be easily cut to fit on site so penetrants can be easily added, changed or removed and the US 150 Bricks can be reused to restore the firestop rating. This makes US 150 ideal for use with data and communication cabling or control cabling and cable trays.

US 150 can be installed from one side allowing openings with limited access to be effectively firestopped. US 150 pillows require no curing so are not limited by installation temperature like sealants. offering a window install window.

Specifications

Density(g/cm3)	0.28-0.38
Color	black
Size	2" x 5" x 8"
VOC	0g/L
Initial Expansion Temp.	180°C
Intumescent Rate	4 - 8X
ASTM E84	Flame 0 Smoke 5
Packaging	26pcs/CTN, 40 CTN/Pallet

Characteristics

- Flexible and compressible for a tight seal
- Repairable, re-penetrable and Reusable
- High expansion rate
- Wide installation window
- Excellent fire resistance
- Asbestos Free and halogen Free
- Easy installation, no special tools required

Testing:

ASTM E814 up to 2 hr F&T Rating

UL 1479 up to 2 hr F&T Rating

CNS 14514 up to 3 hr Class A&B

GB 23864

ASTM E662 & FAR 25.853

FM Approved

ASTM E84

Fill, void or cavity material.
For use in through-penetration firestop and joint systems.

US 150 Firestop Brick

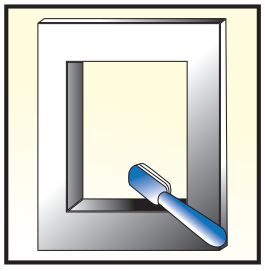

1. Clean the opening

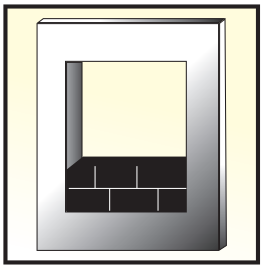

2. Begin stacking bricks, in a bricklike pattern, compress into opening

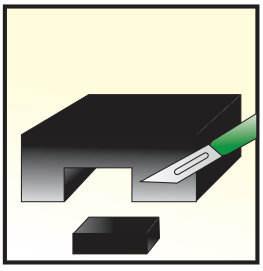

3. Cut the bricks, as needed, to fit the opening or any penetrants

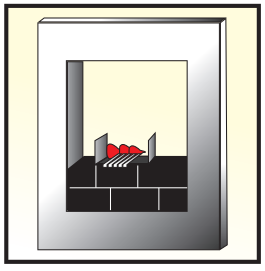

4. Apply FM011 Putty around penetrations as required by Listed system

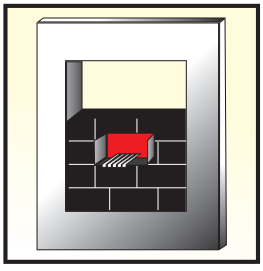

5. Fill opening surrounding penetrant

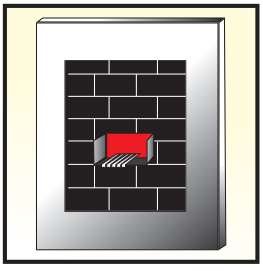

6. Stack bricks to completely fill the remaining opening, use FM011 Putty or FM012 Sealant to fill any voids or gaps

Fireproof Blanket FB01-15

Applications

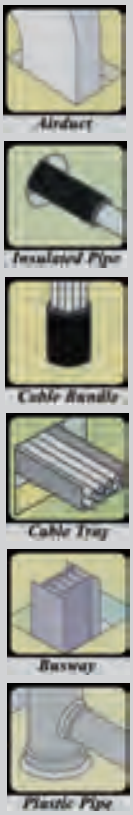

Description

FB01-15 Fireproof Blanket is an industry leading fire resistant wrap consisting of a ceramic fiber blanket encapsulated with a scrim-reinforced foil. It provides a flexible, non-combustible enclosure for duct or cable tray applications. The thermal insulation of FB01-15 can be used in combination with Listed systems to provide a "T" rating to penetrating items.

FB01-15 Fireproof Blanket is easily trimmed to different sizes to fit any installation and can be easily installed to wrap air ducts or metal conduit and cable tray. Lightweight and highly flexible for easy installation, asbestos free, low flame spread and smoke development, FB01-15 offers excellent fire resistant performance.

Meets the intent of LEED® VOC environmental air quality requirements.

Specifications

Thickness:	**13 mm**
Width:	**600 mm or 1200 mm**
Length:	**7200 mm in Roll**
Max. Temperature:	**1260° C (2300° F)**
Density:	**128 Kg/m^3**
Tensile Strength:	**1.05 Kg/cm^2**
Package:	**600 mm - 2 per box 1200 mm - 1 per box**
Performance:	**50+ years HOAC tested**

Fill, void or cavity material.
For use in through-penetration firestop and joint systems.

Fireproof Blanket FB01-15

Testing

UL 1479 3 hr T, F and L Rating

CAN/ULC S115 2 hr FTH Rating

CNS 14514 3 hr Class A and B

ASTM E662

ASTM E 84 Flame 0 Smoke 0

Installation guide:

1. Refer to applicable certification directory or www.paintoprotect.com for listed assemblies.
2. Ensure application area is clean and free of oil, loose dirt, rust or scale.
3. Cut the FB01-15 to a length sufficient to wrap completely around the perimeter of the duct or cable tray, making sure to provide an overlap of 4" or as specified in Listed assembly. Use AL foil tape to seal the cut edge.
4. Cut the next adjacent wrap of FB01-15 to overlap the previous adjacent wrap at least 3" or as specified in Listed assembly. Use INSS2460 to adhere the overlap portion and AL foil tape to seal the cut edges of the blanket.
5. Install banding or tie wire around the FB01-15 to hold it in place.

ProWrap

Description

Industry leading Firestop Technology, ProWrap Blanket is a fire resistive barrier product developed to provide true fire protection for electrical component systems threatened by a hydrocarbon fire condition.

ProWrap Blanket is a ceramic fiber, made from the purest raw materials which are electromelted, air-blown at high speed and fiberized. It is needle punched on both sides and possesses high strength before or after heating. Lightweight and soft to the touch, ProWrap Blanket is under FM Global follow-up inspection service at manufacturing locations ensuring that the product received for installation meets the same exact quality standards of the material that was submitted for testing.

Specifications

Max. Service Temperature (0C):	**1260**
Bulk density (kg/m^3):	**115—150**
Linear Shrinkage:	**≤ 3% @ 1100° C X 24hr**
	≤ 1.5% @ 1000° C X 24hr
Thermal Conductivity (W/m . K):	**≤ 0.13 @ 400° C**
	≤ 0.18 @ 600° C
	≤ 0.26 @ 800°C
Specific Heat (kj / kg .K):	**1.046 @ 800° C**
Available Size: (1roll in 1carton):	**25.0mmX600mmX7200mm per roll**
	37.5mmX600mmX5000mm per roll

ProWrap

Characteristics

- Excellent refractory and insulating properties
- High strength, lightweight, flexible wrap for easy installation
- 30 minutes cable tray and conduit hydrocarbon fire protection
- FM approved base on worse-case test (Empty tray/conduit; no heat sink
- Zero flame and no smoke
- Thermal stability and low shrinkage
- Max. temperature use up to 1260° C

Testing

ASTM E1725

ASTM E1529

FM Approval Class: 3973

International Fireproof Technology, Inc.
17528 Von Karman Ave. Irvine, CA 92614

Office: 949-975-8588
Web Site: www.painttoprotect.com
Email: ptp@painttoprotect.com

Foil Tape

Description

High strength aluminum foil tape meets the needs of many different industries and applications. Used on seams and joints of fiberglass and aluminum backed duct board to provide an air tight/vapor tight seal. Used as a means of securing INSS0812 Wrap Strips in Firestop systems. Tenacious adhesion making it ideal when temperature and humidity issues are present.

Characteristics

- Malleable-conforms to irregular shapes
- High adhesion, even in difficult climates
- Excellent Fire Properties
- Air tight/Vapor tight seal

Foil Tape

Technical Parameters

Adhesive	**Acrylic**
Backing	**Aluminum Foil**
Backing Thickness	**2.8 mils (0.07mm)**
Total Thickness	**4.6 mils (0.12mm)**
Temperature Use Range	**-65°F to 300°F (-54°C to 149°C)**

Applications

- Flame resistance
- Seal joints is FB01-15 Fire Blankets
- Sealing out air and moisture
- Thermally conductive
- UV protection
- Temperature resistant
- Easy Repairs
- Quick stick at normal temperatures and superior low temperature adhesion performance below freezing.

DC315 Intumescent Coating

Description

DC315 is an intumescent coating for Spray Polyurethane Foam (SPF) and provides an alternative 15 or 20 minute thermal barrier. Tested and compliant in the **USA by ICC-ES, AND Canada by CCMC,** DC315 is the most tested and approved alternative thermal barrier on the market today!

To be approved as an Alternative Barrier System, DC 315 is applied over a manufacturer's SPF and tested to the criteria of NFPA 286, UL 1715 or ISO-CAN/ULC 9705 for duration of 15-20 minutes by an accredited fire testing facility. DC 315 has also been tested as an ignition barrier under **AC 377 Appendix X**. DC315 is fully **AC456 Compliant** and satisfies the International Building Code (IBC) International Residential Code (IRC) National Building Code of Canada (NBCC) and many other International model building codes.

DC315 Tested Solutions for Spray Polyurethane Foam

- More full scale Thermal and Ignition Barrier tests than any other product in the world
- DC 315 - 3rd. party inspected for Quality Control: Warnock Hersey Intertek W/N 20947
- Tested useful life, fire resistant property is not compromised after 50 years
- Top coat for color, weather & moisture protection, tested, via NFPA 286 full scale testing
- ANSI 51 testing for incidental food contact
- Passed CAL 1350 - qualify DC 315 as a low-emitting material in the Collaborative for High Performance Schools rating system (CHPS Designed & CHPS Verified)
- Passed strict EPA – V.O.C. and AQMD air emission requirements (for all 50 states)
- 3rd Party tested "Single Coat Coverage" up to 24 Mils WFT, on ceilings and walls, reducing labor costs equaling higher profits
- Meets Life Safety Code 101
- Meets LEED's point

*End Use Applications: DC315 is for interior use as a thermal or ignition barrier coating to protect SPF. Contact IFTI for instruction for using DC315 in other applications such as, but not limited to, cold storage, parking garages, high humidity, or any unconditioned spaces.

Specifications

Finish:	**Flat**
Color:	**Ice Gray, White and Dark Grey are special order**
V.O.C.:	**(47 g/l)**
Volume Solids:	**67%**
Drying Time	**@ 77°F & 50% RH To touch 1-2 hours to recoat 2 to 4 hours**
Type of Cure:	**Coalescence**
Flash Point:	**None**
Reducer/Cleaner:	**Water**
Shelf Life:	**1 year (unopened)**
Packaging:	**5 & 55 gallon containers**
Shipping weight:	**5 gallon pail - 58 lbs. 55 gallon drum - 640 lbs.**
Application:	**Brush, roller, conventional and airless spray**
Performance:	**50+ years HOAC tested**
WH Listed:	**Spec ID 32890**

DC315 Intumescent Coating

Visit us at our website www.painttoprotect.com to obtain a current matrix of all the manufacturer's foams DC 315 has been tested and approved as Thermal or Ignition barriers in compliance with current Building Codes.

International Building Code Fire Performance Requirements for SPF: The International Building Code (IBC) mandates that SPF be separated from the interior of the building by a 15-minute thermal barrier, or other approved covering. DC 315 passed certified NFPA 286 and UL 1715 test over a variety of open and closed cell spray applied urethane foams that were conducted by IAS certified testing facilities. All tests performed comply with the requirements of 2009 IBC Section 803.1.2, and Section 2603.9; 2012 IBC Section 803.1.2 and Section 2603.10

Alternative Ignition Barrier Assemblies DC 315 meets the requirements for ignition barrier per **AC 377, Appendix X.**

National Building Code of Canada Alternative Thermal Barrier Assemblies: DC315 prevents flashover for 10 minutes for Combustible Construction or 20 minutes for Non-Combustible construction when tested to the CAN/ULC 9705 Standard and meets the Intent of NBC Section 3.1.5.12 for the protection of foamed plastics. Ensure application thickness is applied according to building type.

European Union: DC315 has been tested over both medium density and low density spray polyurethane foam and provides an EN13501-1 Fire Classification of B-S2-D0.

Australia and New Zealand: DC315 has been tested to the AUS ISO- 9705 over spray polyurethane foam and meets Group 2 Classification. ISO5660 (part 1 and 2) tests confirm Group number classification as 1 which allows for the addition of the thermal barrier coating to upgrade the fire rating.

Pump:	(Graco) UltraMax 795 or equivalent
PSI:	3000
GPM:	1.1
Tip:	517 - 523 or equivalent.
Filter:	Removal from the machine and gun is required
Hose:	3/8" diameter airless spray line for the first 100' from pump and 1/4" x 3' whip
Pump:	(Graco) TexSpray Mark 5 or equivalent
PSI:	3300
GPM:	1.35
Tip:	517 - 523 or equivalent.
Filter:	Removal from the machine and gun is required
Hose:	3/8" diameter airless spray line for the first 100' from pump and 1/4" x 3' whip
Pump:	(Graco) GMAX 7900 or equivalent
PSI:	3300
GPM:	2.2
Tip:	517 - 529 or equivalent.
Filter:	Removal from the machine and gun is required
Hose:	1/2" diameter airless spray line for the first 100' 300' from pump and 1/4" x 3' whip
Pump:	(Graco) GH 833 or equivalent
PSI:	4000
GPM:	4.0
Tip:	517 - 529 or equivalent.
Filter:	Removal from the machine and gun is required
Hose:	1/2" diameter airless spray line for the first 100'-300' from pump and 1/4" x 3' whip

Testing

USA
- ASTM E84 - Flame Spread 0 Smoke 10
- NFPA 286, UL1715
- ASTM E2768- 30 minute Ignition Resistant material

Canada
- CAN/ULC S102 FSR 23 SDC 145 - (tested as a system over SPF)
- CAN/ULC S 101
- CAN/ULC 9705 10 and 20 minute assembly testing

European Union
- BS 476 Part 6 & 7
- BS EN ISO 11925-2
- EN 13823
- EN 13501 Classification B S2 D0

Australia/New Zealand
- AUS ISO 9705
- AS/NZS 1530.3
- AS 5637.1 Group Classification 2, NZBC Group 2-S
- ISO 5660 Parts 1 and 2

DC333
Intumescent Fireproof Primer

Description

DC 333 is a water based intumescent coating used to increase fire resistance ratings of construction materials like OSB/Plywood, gypsum and lumber. DC 333 is also effective at reducing flame spread ratings of materials not required to meet resistance ratings. Applied as a primer to interior surfaces, DC 333 can be top-coated with desired finish latex paint to match décor. NFPA 703, Standard for Fire Retardant – Treated Wood and Fire-Retardant Coatings for Building Materials, defines FRTW as "a wood product impregnated with chemicals by a pressure process or other means during manufacture, which is tested in accordance with ASTM E 84, Standard Test Method of Surface Burning Characteristics of Building Materials, NFPA 255, Standard Method of Test of Surface Burning Characteristics of Building Materials or UL 723, Standard for Test for Surface Burning Characteristics of Building Materials; has a listed flame spread index of 25 or less; and shows no evidence of significant progressive combustion when the test is continued for an additional 20-minute period; nor does the flame front progress more than 10.5 feet (3200 mm) beyond the centerline of the burners at any time during the test."

Specifications

Finish:	**Flat**
Packaging:	**5 Gallon Pails**
Color:	**Off White**
V.O.C.:	**56 g/L**

Advantages

- Water Based Acrylic Latex
- 200 sq. ft. per Gallon as Class A
- Non-Toxic
- Hypoallergenic
- Non-Carcinogenic
- Passed Strict EPA – V.O.C. and AQMD
- Spray, Roll, or Brush
- Warnock Hersey Listed
- Compatible with any interior paintable surface

Fill, void or cavity material.
For use in through-penetration firestop and joint systems.

DC333
Intumescent Fireproof Primer

Testing:

Facility	Testing Standard	Protocol	Time/Test Results	Coverage Rate
Intertek	ASTM E 84	Surface Burning Characteristics	Flame 25 / Smoke 165	300 sq. ft. per gal
Intertek	ASTM E 84-08 30 minutes extended with exterior top coat	Surface Burning, California Urban Wildland Interface, NFPA 703 Standard for FRTW	Flame 0 / Smoke 20	100 sq. ft. per gal
Applied Physics Laboratory	A.S. 1530 part 3, 1999 Early Fire Hazard Properties	Simultaneous Ignition, Flame Prop., Heat release and Smoke release	0 / 0 / 0 / 3	2.5 sq m/L
Western Fire Center (WFCi)	A.S.1530.4 Equivalent to ASTM E 119, CAN/ULC S 101	Thermal Barrier, Wood Stud 1/2" Gypsum Assembly	1 Hour / Passed	65 sq. ft. per gal
CSIRO	A.S.1530.4 Equivalent to ASTM E 119, CAN/ULC S 101	Thermal Barrier, FC Sheet ceilings	90/90/90 and 60 Minutes RISF	0.7m^2/L
CSIRO	A.S.1530.4 Equivalent to ASTM E 119, CAN/ULC S 101	Thermal Barrier, Fibrous plaster ceilings	90/90/90 and 60 Minutes RISF	1m^2/L
CSIRO	A.S.1530.4 Equivalent to ASTM E 119, CAN/ULC S 101	Thermal Barrier, Standard plaster-board ceilings	60/60/60 and 60 Minutes RISF	1m^2/L
CSIRO	A.S.1530.4 Equivalent to ASTM E 119, CAN/ULC S 101	Thermal Barrier, Lath and plaster ceilings	90/90/90 and 60 Minutes RISF	1m^2/L
International Carbide	ASTM E 119 Internal Test Report,	Vertical wall 1/2" Stud / Gypsum Assembly	1 Hour / Passed	60 sq. ft. per gal
Intertek	CAN/ULC S101	Fire Endurance Thermal Barrier	15 Minutes / Passed	110 sq. ft. per gal
Intertek	CAN/ULC S102	Surface Burning	Flame 0 / Smoke 25	
Accugen Laboratories Inc.	ASTM D 5590	Mold and Fungal Resistance Test	Mold Resistant	
International Carbide	ASTM E119 Internal Test	Fire Endurance and Hose Stream / Plywood	1 Hour / Passed	40 sq. ft. per gal
Wecks Labs.	EPA AQMD VOC	VOC Emission	56 g/L	
CSIST Fire Research Labs	NES 713	Toxicity During Combustion	Non Toxic	
UL	UL 723	Surface Burning	Flame 5 Smoke 10	100 sq. ft. per gal
UL	UL 723	Surface Burning	Flame 10 Smoke 25	200 sq. ft. per gal

Uses Elementary, Intermediate, High School, Colleges, Nursing Homes, Hospitals, Child Care Centers, Penal Institutions, Apartments, Hotels, Factories, Warehouses, Utilities, Businesses, Retail Stores, Restaurants, Railroad, Other Transportation Companies, Military Installations, Other Government Facilities.

DC5040 Intumescent Coating

Description

DC5040 is a water based thin film intumescent coating used to provide fire resistance to engineered wood framing members such as I-Joists. Applied to the I-Joist only, once the components are installed, DC5040 provides equivalence to the 2-by-10-dimension lumber prescribed in Section R302.13, Exception 4 of the 2015 IRC® and Section R501.3, Exception 4 of the 2012 IRC®.

DC5040 has been fire tested in accordance with a full-scale ASTM E-119 and meets IAPMO UES Acceptance Criteria EC017 for Field-Applied Fire Protective Coatings.

Other coatings testing requires the BOTH the I-Joists and the sub floor to be coated. DC5040's superior performance is tested, as a single coat, applied to the I-Joist only. Subfloors can add up to 50% more surface area to be coated, DC5040 maximizes yield, reduces labor and provides a cost effective solution to meeting IRC Code requirements.

DC5040 Tested Solutions for Fire Protection of Engineered Wood Products

- Full Scale ASTM E119 Fire Tested
- Meets IAPMO UES EC017 Acceptance Criteria For Field Applied Fire Protective Coatings UES ER-568
- Meets Section A4.4 Fire Testing of ICC-ES AC14 Acceptance Criteria of Prefabricated I-Joists
- DC5040 is a topical coating with a neutral pH, applied without pressure or soaking, and does not contain chemicals that are detrimental to wood or engineered wood products.
- Tested useful life, fire resistance is not compromised for at least 50 years
- Passed strict EPA – V.O.C. and AQMD air emission requirements (for all 50 states)
- 3rd Party Tested, Intertek Listed and Inspected
- Single Coat Coverage applied to I-Joists only reducing labor costs equaling higher profits
- Passed CDPH/EHLB/Standard Method V1.2, 2017 (CA Section 01350): Smallscale environmental chamber test; VOC emission compliance test of building products;

Specifications

Finish	**Flat**
Color	**White**
pH	**7 ±1**
V.O.C.	**37g/L**
Solids By Volume	**67%**
Specific Gravity	**1.35+/-0.1 g/cc**
Drying Time	**@77° F & 50% R.H. – To touch 1 – 2 hours, to recoat, if required, 2 to 4 hours**
Flash Point	**None**
Reducing or Cleaning	**Water**
Shelf Life	**18 months from date of manufacture in unopened containers and stored at 5° C to 35° C (40° F to 95° F)**
5 Gal. Container Weight	**58 lbs.**

Testing

ASTM E84 - Flame Spread 0 Smoke 15

ASTM E 119- Fire Resistance

CAL 1350 Compliant

DC5040 Intumescent Coating

Application Thickness

DC5040 must be applied at 26 mils WFT to the I-Joist top and bottom flanges and both sides of the web. The sub-floor is not required to be coated.

Material Preparation

DC5040 must be thoroughly mixed before application. Failure to do so will seriously compromise the coating's ability to perform. It is required to perform mechanical stirring with a medium speed drill and a paddle appropriate for the size container you are working from. Contents should be stirred from the bottom up making sure to scrape the bottom and sides with a paint stick as you go. Contents should be stirred to a creamy consistency with no lumps. Continue mixing for 4-5 minutes per 5 gallons pail, 15-20 minutes per 55-gallon drum.

Temperature:

PROTECT FROM FREEZING DURING SHIPMENT, STORAGE, AND USE. DC5040 is a water based coating which will freeze and become unusable at temperatures below 32° F. Do Not store material at temperatures below 40° F. Do Not apply DC5040 when ambient air and substrate temperatures fall below 50° F. Store DC5040 at 40° F to 95° F at all times.

Ventilation:

Fans may be required to circulate the air during application, especially in high or low humidity. Air flow must be across the area DC5040 was applied, but not directly on it. If the relative humidity is greater than 85% at the end of spraying and cross ventilation is not drastically reducing it, then a mechanical industrial dehumidifier is required.

Application Equipment

DC 5040 can be applied by brush, roller or airless sprayer. For maximum yield and coverage spray application is recommended. Proper equipment and settings are imperative for correct application. Remove all filters from machine and gun. DC5040 requires high pressure to atomize the coating at the spray tip, correct atomization will yield a more consistent spread rate and easier coverage of uneven surfaces. Using the table, ensure you match your tip size to your machine - this is critical to ensure correct pressure at the spray tip. If the spray pattern has fingers or tails, then the pressure should be increased. If the maximum pressure of the sprayer is not enough to achieve a good spray pattern, a spray tip with a smaller orifice should be used.

Pump:	**Graco UltraMax 795 or equivalent**
PSI:	3000
GPM:	1.1
Tip:	517 - 523 or equivalent.
Filter:	60 mesh filter at machine, remove filter from gun if present
Hose:	3/8" diameter airless spray line for the first 100' from pump and 5/16" x 3' whip
Pump:	**Graco TexSpray Mark 5 or equivalent**
PSI:	3300
GPM:	1.35
Tip:	517 - 523 or equivalent.
Filter:	60 mesh filter at machine, remove filter from gun if present
Hose:	3/8" diameter airless spray line for the first 100' from pump and 5/16" x 3' whip
Pump:	**Graco GMAX 7900 or equivalent**
PSI:	3300
GPM:	2.2
Tip:	517 - 529 or equivalent.
Filter:	60 mesh filter at machine, remove filter from gun if present
Hose:	3/8" diameter for first 200' 1/4" for additional 100' from pump and 5/16" X 3' whip
Pump:	**Graco GH 833 or equivalent**
PSI:	4000
GPM:	4.0
Tip:	517 - 529 or equivalent.
Filter:	60 mesh filter at machine, remove filter from gun if present
Hose:	1/2" diameter for first 200' 3/8" for additional 100' from pump and 5/16" X 3' whip

DC310 Fireproof Cable Coating

Description

DC310 fireproof cable coating for wires and cable is developed using innovative intumescent technology. It is a heavy duty intumescent coating for interior applications used to effectively prevent flame spread. When fire occurs, the coating will rapidly intumesce to form a foam char layer that prevents fire propagation. DC310 fireproof cable coating is water based, asbestos-free, non-halogenated and environmentally–friendly. DC310 is able to protect cables for up to 90 minutes depending on application thickness and cable type.

Specifications

Color :	**White**
Finish :	**Flat**
Density:	**1.3±0.1 kg/L**
Viscosity:	**10000-25000cps(25°C); Adjustable**
pH:	**7.5±0.5**
VOC:	**56 g/L**
Typical thickness:	**1mm WFT equivalent to 0.6mm DFT**
Solid content:	**≥60% Volume**
Storage temp:	**40° F - 95° F (5° C - 35° C)**
Drying time (25° C) :	**3-4 hours touch dry, 24 hours dried through**
Application Temp:	**40° F - 104° F (5° C - 40° C)**
In-Service Temp:	**-13° F - 176° F (-25° C - 80° C)**
Packaging:	**25 kg/pail**
Shelf life:	**12 months**

Testing

IEEE383- Standard for Qualifying Electric Cables and Splices for Nuclear Facilities

IEC60332-3A- Test of vertical flame spread on single or grouped electrical cables

GB28374- Standard flame spread test of electrical cables.

ASTM D5116 - Determination of Organic Emissions from Indoor Materials/Products

ASTM E662- Standard Test Method for Specific Optical Density of Smoke Generated by Solid Materials

Advantages

- Intumescent
- Water Based
- Low Odor
- Asbestos Free
- Flexible
- Safe and Easy to Use

DC310 Fireproof Cable Coating

Recommended sprayer:

Pump:	Wagner PS 3.34
PSI:	3300
GPM:	1.00
Tip:	517 – 523 or equivalent.
Filter:	60 mesh at machine
Hose:	3/8" diameter airless spray line for the first 100' from pump and 1/4" x 3' whip
Pump:	(Graco) TexSpray Mark 5 or equivalent
PSI:	3300
GPM:	1.35
Tip:	517 - 523 or equivalent.
Filter:	60 mesh at machine, removal of filter is recommend from gun
Hose:	3/8" diameter airless spray line for the first 100' from pump and 1/4" x 3' whip

Installation guide:

1. Surfaces to be coated must be clean and dry. Use a dry rag to remove any oil, grease, and dirt prior to cable coating application.
2. Mix DC310 cable coating thoroughly by a power agitator before application. Thinner is normally not required. If necessary, use potable water (3% max.) to adjust viscosity. Water is also used for tools and spray machine cleaning.
3. Coating can be applied by means of airless spray equipment in a single pass, not more than 1mm-1.2mm (wet coating thickness) to prevent slumping. Surface shall be measured using a wet film thickness gauge. If applying coating by brush or roller, it may be required to apply thinner coats to prevent slumping. The coating should be applied when site temperature is between 5° C (40° F) and 40°C (104° F). Temperature must be maintained until coating has fully dried.
4. Verify the DFT by using calipers to measure the cable before coating and once coating has fully dried.
5. Do not allow the coating material to remain in hoses, gun or spray equipment. Clean all equipment with water immediately after use.
6. All unused coating should be stored in tightly closed container. Surface skinning may show in a partially filled container. Filter the material prior to use.

The estimated quantity of DC310 can be calculated as = 2 x Pi x R x Length of cable x Number of cables x Thickness of coating. All coating approved by FM3971 must be applied at 1.6mm DFT.

DC6150 Cable Coating

Description

DC 6150 Cable Coating is a non-halogenated, asbestos-free, non-toxic, flexible, ablative fire retardant cable coating designed to prevent the propagation of fire along plastic jacketed electrical cables. DC 6150 Cable Coating is FM Approved and tested to ensure it can withstand extreme conditions such as freeze/thaw cycles and salt water immersion. This testing also ensures that the protective coating does not de-rate the cables current carrying capacity. DC 6150 Cable Coating is a water based latex and is suitable for both interior and exterior use.

Specifications

Color:	White
Odor:	Mild Latex
Gloss Level:	Matt
Specific Gravity:	1.55 ± 0.1
Solids by Weight:	70~76%
pH Value:	6 ~ 8
VOC's:	28 g/L
Dry to Touch:	2 ~ 4 hours
Dry Through:	2 ~ 4 days (Depending on ambient conditions)
Application:	Airless spray, brush or roller
In-Service Temp:	-13° F - 176° F (-25° C - 80° C)
Typical Thickness:	1000 microns WFT (39.5 mils) equivalent to 640 microns DFT (25 mils)
Packaging:	25Kg/pail
Shelf life:	18 months

DC6150 Cable Coating

Testing

FM Approval Class: 3971 for Single or Grouped Electrical Cables

IEEE383- Standard for Qualifying Electric Cables and Splices for Nuclear Facilities Passed at 1.5 mm

IEC 60332- Test of vertical flame spread on single or grouped electrical cables Passed at 0.9 mm Class 3A

IEEE1202 - Standard for Flame Testing of Cables for Use in Cable Tray in Industrial and Commercial Occupancies Passed 1.5 mm

GB28374 – Standard flame spread test of electrical cables Passed at 1.0 mm including fire and weather testing

Installation guide:

1. Surfaces to be coated must be clean and dry. Use a dry rag to remove any oil, grease, and dirt prior to cable coating application.
2. Mix DC 6150 cable coating thoroughly by a power agitator before application. Thinner is normally not required. If necessary, use potable water (3% max.) to adjust viscosity. Water is also used for tools and spray machine cleaning.
3. Coating can be applied by means of airless spray equipment in a single pass not more than 0.8mm~0.9mm (wet coating thickness) to prevent slumping. Surface shall be measured using a wet film thickness gauge. If applying coating by brush or roller, it may be required to apply thinner coats to prevent slumping. The coating should be applied when site temperature is between 4° C (40° F) and 40° C (104° F). Temperature must be maintained until coating has fully dried.
4. Recommended coating thickness on cables: 2.5 mm WFT results in 1.6 mm dry. Verify the DFT by using calipers to measure the cable before coating and once coating has fully dried.
5. Do not allow the coating material to remain in hoses, gun or spray equipment. Clean all equipment with water immediately after use.
6. All unused coating should be stored in tightly closed container. Surface skinning may show in a partially filled container.

The estimated quantity of DC6 150 can be calculated as = Width of the cable X number of cables X Pi X Length of cable tray or the length of the cable X 2.5 mm (thickness of wet film. X 1.20 (20% wastage). All coating approved by FM3971 must be applied at 1.6 mm DFT

DC 68 Spray to Protect

Approved By The California Department of Forestry and Fire Protection No. F-14901

Specifications

Passed:	**NFPA 701 Tested at UL UL Certificate of Compliance**
Meets:	**NFPA 101 Life Safety Codes**
Description:	**Fire Retardant for Fabric and Material***
Conveniently packaged:	**24 FL OZ (0.7 L) Trigger spray bottles 1 Gallon and 5 Gallon Pails**
Coverage:	**480 Sq Ft per gallon 120 Sq Ft per Quart 75 square feet per 20 FL.OZ**
Shelf Life:	**3 Years**
V.O.C.:	**Low V.O.C**
RoHS Compliant CE/2008/18326:	**No Formaldehyde No Cadmium No Lead No Mercury No Hexavalent Chromium**

Description

Interior furniture and synthetic fabrics are the number one contributing factors to fire spread and smoke generation.

Spray to Protect DC 68: is a new water based fire proofing spray that is a Non-Toxic, Hypoallergenic, colorless and odorless formula that can be used on virtually any water absorbent fabric or material*.

Three components are necessary for fire: fuel, oxygen, and a source of ignition. Once Applied, DC68 Disrupts the combustion stage of a fire cycle, including avoiding or delaying "flash-over," or the burst of flames normally present when combustible materials burn. DC68 automatically reacts to fire or heat and converts combustible gases to non-combustible nitrogen and carbon dioxide which dilutes the flammable gases and lowers the oxygen concentrations in the flame formation zone. Not only does this remove the oxygen required for fire, but also has a cooling affect that reduces heat and eliminates this as an ignition source.

Removing only one of the three required components will extinguish a fire, DC68 works to remove two- Oxygen and Heat.

*Not intended for use on Clothing

Code

DC68 Meets;

IBC Section 424.2(5)(8) Children's Play Structures Textiles and films complying with the flame fire propagation performance criteria contained in NFPA 701.

IBC Section 806.3 Combustible decorative materials curtains, draperies, fabric partitions hangings and similar combustible decorative materials suspended from walls or ceilings shall comply with Section 806.4

IBC Section 806.4 Acceptance criteria and reports to exhibit improved fire performance, curtains, draperies, fabric hangings and similar combustible decorative materials suspended from walls or ceilings shall be tested by an approved agency and meet the flame propagation performance criteria of NFPA 701

DC 68 Spray to Protect

Uses:

- Coverage 75 square feet per 24 fl. oz.
- Curtains
- Drapes
- Carpets and Rugs
- Upholstery
- Decorations
- Paper Products
- Sleeping Bags
- Mattresses
- Wall Paper & Coverings
- Aprons
- Boots
- Table Cloths
- Any Water Absorbent Fabric*
- Requires no special equipment to apply simply soak or spray depending on your needs

*note- Not intended for use on clothing

Unprotected

Upon exposure to an ignition source tent immediately catches fire and burns to the ground in less than 3 minutes

Protected

Treated tent exposed to same ignition source did not ignite during 15 minute test

HITS Intumescent Sheet

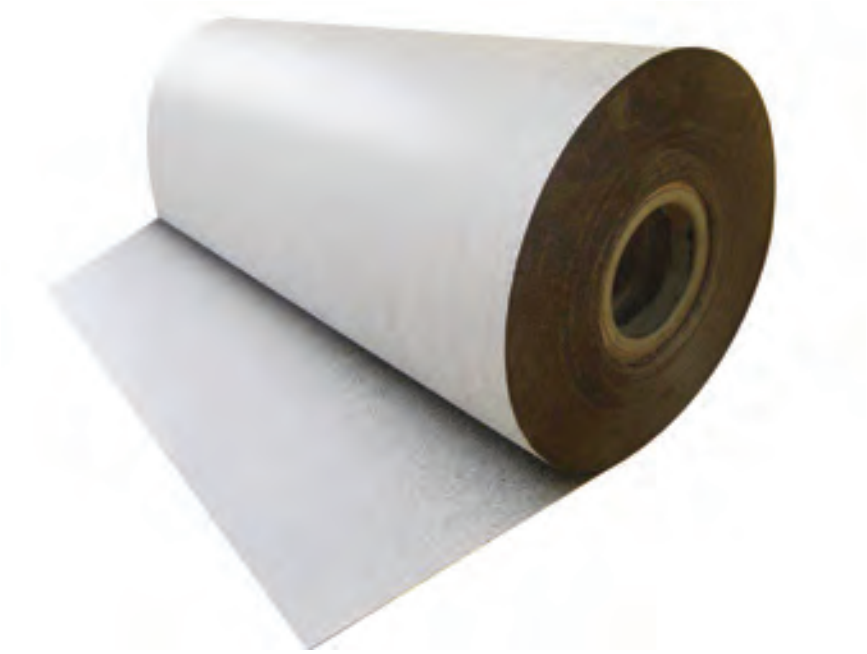

Product Description

HITS - High Intumescent Sheet is a flexible and ultra thin, expandable graphite based intumescent sheet designed to create a thermal insulation layer to protect the substrate during a fire.

The non woven fabric base is combined with proprietary intumescent compounds that, when exposed to heat, will expand to approx. 15mm. The carbon char will provide excellent fire protection of the substrate and significantly reduce smoke. If HITS is installed in an application that limits the expansion, the resulting high density char will provide a better thermal barrier to further delay ignition.

Specifications

Thickness	**0.45 ±0.05 mm, 0.36 ±0.04 mm**
Width	**1200 mm**
Length	**1000 M**
Basic Weight	**280 ± 14g/M²**
Base Materials	**Non-woven fabric, graphite based fire retardants**
Expandable Rate	**≥ 35X by Volume**
L.O.I.	**> 50**
UL 723 / ASTM E84	**Class A, Flame Spread 20 Smoke 15**

Characteristics

- Ultra Thin, light and flexible for easy installation
- Low expansion temperature
- High expansion rate
- Dense and strong intumescent carbon char layer
- Halogen, asbestos and formaldehyde free,
- Environmentally friendly safe and easy to use.

CERTIFICATE OF COMPLIANCE

Certificate Number	20161012-R38513
Report Reference	R38513
Issue Date	2016-October-12
Issued to:	International Fireproof Technology Inc. 17528 Von Karman Ave Irvine, CA 92614
This is to certify that representative samples of	Duct-wrap Materials
	Have been investigated by UL in accordance with the Standard(s) indicated on this Certificate.
Standard(s) for Safety:	ANSI/UL 1479, "Fire Tests of Penetration Firestops."
Additional Information:	See the UL Online Certifications Directory at www.ul.com/database for additional information

Only those products bearing the UL Certification Mark should be considered as being covered by UL's Certification and Follow-Up Service.

Look for the UL Certification Mark on the product.

Type INCA Fireproof Blanket FB01-15 for use in Through-Penetration Firestop System Nos. C-BJ-1056, C-BJ-4033, C-BJ-6001, C-BJ-7108, C-BJ-8021, C-BJ-8025.

Bruce Mahrenholz, Director North American Certification Program

UL LLC

Any information and documentation involving UL Mark services are provided on behalf of UL LLC (UL) or any authorized licensee of UL. For questions, please contact a local UL Customer Service Representative at http://ul.com/aboutul/locations/

CERTIFICATE OF COMPLIANCE

Certificate Number	20161012-R38512
Report Reference	R38512
Issue Date	2016-October-12
Issued to:	International Fireproof Technology Inc. 17528 Von Karman Ave Irvine, CA 92614
This is to certify that representative samples of	Firestop Devices
	Have been investigated by UL in accordance with the Standard(s) indicated on this Certificate.
Standard(s) for Safety:	ANSI/UL 1479, "Fire Tests of Penetration Firestops,"
Additional Information:	See the UL Online Certifications Directory at www.ul.com/database for additional information

Only those products bearing the UL Certification Mark should be considered as being covered by UL's Certification and Follow-Up Service.

Look for the UL Certification Mark on the product.

Refer to page 2 for more details.

Bruce Mahrenholz, Director North American Certification Program

UL LLC

Any information and documentation involving UL Mark services are provided on behalf of UL LLC (UL) or any authorized licensee of UL. For questions, please contact a local UL Customer Service Representative at http://ul.com/aboutul/locations/

CERTIFICATE OF COMPLIANCE

Certificate Number	20161012-R38512
Report Reference	R38512
Issue Date	2016-October-12

This is to certify that representative samples of the product as specified on this certificate were tested according to the current UL requirements.

Type INCA Firestop Collar SSCI-X for use in Through-Penetration Firestop System Nos. C-AJ-2542, C-AJ-2543, C-AJ-2545, C-AJ-2710, C-AJ-2711, C-AJ-2763, C-AJ-2764, C-AJ-2765, C-AJ-2766, C-AJ-2768, C-AJ-8203, C-AJ-8224, C-BJ-2031, C-BJ-2032, F-A-2241, F-A-2242, F-A-2262, F-A-2263, F-A-2264, F-A-2265, F-A-2266, F-B-8007, W-L-8080.

Bruce Mahrenholz, Director North American Certification Program

UL LLC

Any information and documentation involving UL Mark services are provided on behalf of UL LLC (UL) or any authorized licensee of UL. For questions, please contact a local UL Customer Service Representative at http://ul.com/aboutul/locations/

CERTIFICATE OF COMPLIANCE

Certificate Number	20161012-R38511
Report Reference	R38511
Issue Date	2016-October-12
Issued to:	International Fireproof Technology Inc. 17528 Von Karman Ave Irvine, CA 92614
This is to certify that representative samples of	Fill, Void or Cavity Materials Fill, Void or Cavity Materials Certified for Canada
	Have been investigated by UL in accordance with the Standard(s) indicated on this Certificate.
Standard(s) for Safety:	ANSI/UL 1479, "Fire Tests of Penetration Firestops," ANSI/UL 2079, "Tests for Fire Resistance of Building Joint Systems," CAN/ULC-S115, "Standard Method of Fire Tests of Firestop Systems."
Additional Information:	See the UL Online Certifications Directory at www.ul.com/database for additional information

Only those products bearing the UL Certification Mark should be considered as being covered by UL's Certification and Follow-Up Service.

Look for the UL Certification Mark on the product.

Refer to page 2 for more details.

Bruce Mahrenholz, Director North American Certification Program

UL LLC

Any information and documentation involving UL Mark services are provided on behalf of UL LLC (UL) or any authorized licensee of UL. For questions, please contact a local UL Customer Service Representative at http://ul.com/aboutul/locations/

CERTIFICATE OF COMPLIANCE

Certificate Number	20161012-R38511
Report Reference	R38511
Issue Date	2016-October-12

This is to certify that representative samples of the product as specified on this certificate were tested according to the current UL requirements.

Elastomeric Fire Caulk INSS1186 for use in Joint System Nos. FF-D-1154, FW-D-1100, HW-D-1111, WW-D-1169.

Fire Barrier Silicone Sealant INSS2460+ for use in Joint System Nos. FF-S-1033, FW-S-1019, HW-S-1015, WW-S-1035.

Fire Barrier Foam US110 for use in Through-Penetration Firestop System Nos. F-A-1141, F-A-2242, F-B-3014, F-B-4004, F-B-7003.

Fire Barrier Foam US150 for use in Through-Penetration Firestop System Nos. C-BJ-0027, C-BJ-8025, F-B-0002, F-B-3011, F-B-4003.

Fire Barrier Caulk INSS1440 for use in Through-Penetration Firestop System Nos. C-AJ-1635, C-AJ-1636, C-AJ-2709, C-AJ-2710, C-AJ-2711, C-AJ-3326, C-AJ-4101, C-AJ-4102, C-AJ-5350, C-AJ-5351, C-AJ-6045, C-AJ-6046, C-AJ-7159, C-AJ-8224, F-A-2243, F-A-2244, F-B-3014, F-B-4004, F-B-7003.

Fire Barrier Silicone Sealant INSS2460 for use in Through-Penetration Firestop System Nos. C-AJ-1605, C-AJ-1624, C-AJ-4097, C-AJ-5331, C-AJ-7142, C-AJ-8203, C-BJ-0028, C-BJ-1056, C-BJ-1057, C-BJ-1060, C-BJ-2031, C-BJ-2032, C-BJ-4033, C-BJ-4036, C-BJ-5016, C-BJ-5019, C-BJ-6001, C-BJ-7004, C-BJ-7108, C-BJ-8021, C-BJ-8023, C-BJ-8025, C-BK-3003, F-A-1141, F-A-2242, F-B-1013, C-AJ-2545, W-L-1430, W-L-5277, W-L-7181, W-L-8080.

Intumescent Strip INFS0812 for use in Through-Penetration Firestop System Nos. C-AJ-2542, C-AJ-2654, C-AJ-2709, C-BJ-2043, F-A-2244, F-B-4005.

Firestop Sheet FP-02 for use in Through-Penetration Firestop System Nos. C-BJ-8025, F-B-4005, F-B-8007.

Firestop Sheet FP-04+ for use in Through-Penetration Firestop System Nos. C-AJ-1605, C-AJ-1636, C-AJ-2711, C-AJ-4101, C-AJ-5331, C-AJ-5351, C-AJ-6046, C-AJ-7142, C-AJ-8203, C-AJ-8224, C-BJ-1060, C-BJ-2032, C-BJ-4036, C-BJ-5019, C-BJ-7004, C-BJ-8023, W-L-1430, W-L-5277, W-L-7181, W-L-8080.

FP05 Coated Firestop Board for use in Through-Penetration Firestop System Nos. C-AJ-1624, C-AJ-4097.

Moldable Firestop Putty FM011 for use in Through-Penetration Firestop System Nos. C-AJ-2542, C-AJ-2653, C-AJ-2654, C-AJ-2708, C-AJ-4095, C-AJ-8203, C-AJ-8213, C-BJ-2042, C-BJ-2043, C-BJ-4033, C-BJ-4036, C-BJ-8023, C-BJ-8025, F-A-2243, F-B-4005, F-B-8007, W-L-8080.

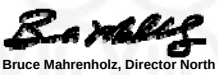

Bruce Mahrenholz, Director North American Certification Program

UL LLC

Any information and documentation involving UL Mark services are provided on behalf of UL LLC (UL) or any authorized licensee of UL. For questions, please contact a local UL Customer Service Representative at http://ul.com/aboutul/locations/

CERTIFICATE OF COMPLIANCE

Certificate Number	20161012-R38511
Report Reference	R38511
Issue Date	2016-October-12

Firestop Putty FM012 for use in Through-Penetration Firestop System Nos. C-AJ-1619, C-AJ-2653, C-AJ-2654, C-AJ-4095, C-AJ-5355, C-AJ-6043, C-AJ-7146, C-AJ-7147, C-AJ-8213, C-BJ-2042, C-BJ-2043, F-B-4005, F-B-7004.

DC-309 Coating for use in Through-Penetration Firestop System Nos. C-AJ-2544, C-BJ-1056, C-BJ-1057, C-BJ-4033, C-BJ-5016, C-BJ-6001, C-BJ-7108, C-BJ-8021, C-AJ-2542, C-AJ-2543.

FP-03 INCAWOOL Board for use in Through-Penetration Firestop System Nos. C-BJ-5017, C-BJ-7001, F-A-1141, F-A-2242.

CFS01 Mortar for use in Through-Penetration Firestop System Nos. C-AJ-4096, F-A-1142, F-A-2241, F-A-4008, F-A-5048, F-A-6004.

GC99-20 Coating for use in Through-Penetration Firestop System Nos. C-AJ-1624, C-AJ-4097.

Bruce Mahrenholz, Director North American Certification Program

UL LLC

Any information and documentation involving UL Mark services are provided on behalf of UL LLC (UL) or any authorized licensee of UL. For questions, please contact a local UL Customer Service Representative at http://ul.com/aboutul/locations/

CERTIFICATE OF COMPLIANCE

Certificate Number	20161012-R38512
Report Reference	R38512
Issue Date	2016-October-12
Issued to:	International Fireproof Technology Inc. 17528 Von Karman Ave Irvine, CA 92614
This is to certify that representative samples of	Firestop Devices Certified for Canada
	Have been investigated by UL in accordance with the Standard(s) indicated on this Certificate.
Standard(s) for Safety:	CAN/ULC-S115 (2005), "Standard Method of Fire Tests of Firestop Systems."
Additional Information:	See the UL Online Certifications Directory at www.ul.com/database for additional information

Only those products bearing the UL Certification Mark should be considered as being covered by UL's Certification and Follow-Up Service.

Look for the UL Certification Mark on the product.

Refer to page 2 for more details.

Bruce Mahrenholz, Director North American Certification Program

UL LLC

Any information and documentation involving UL Mark services are provided on behalf of UL LLC (UL) or any authorized licensee of UL. For questions, please contact a local UL Customer Service Representative at http://ul.com/aboutul/locations/

CERTIFICATE OF COMPLIANCE

Certificate Number 20161012-R38512
Report Reference R38512
Issue Date 2016-October-12

This is to certify that representative samples of the product as specified on this certificate were tested according to the current UL requirements.

Type INCA Firestop Collar SSCI-X firestop device for use in through-penetration firestop systems described in Vol. 2 of the UL Fire Resistance Directory. The specific System Nos. and the applicable rating information are as follows:

System No.	Rating Hr			
	F	FT	FH	FTH
C-AJ-2763	2	2	2	2
C-AJ-2764	2	2	2	2
C-AJ-2765	2	2	2	2
C-AJ-2766	2	2	2	2
C-AJ-2768	2	2	2	2
F-A-2262	2	2	2	2
F-A-2263	2	2	2	2
F-A-2264	2	2	2	2
F-A-2265	2	2	2	2
F-A-2266	2	2	2	2

+ Vented piping systems described in the UL Fire Resistance Directory are limited to closed piping systems based on the Canadian building code requirements.

++ Vented piping systems described in the UL Fire Resistance Directory are limited to closed piping systems based on the Canadian building code requirements. Closed piping systems described in the UL Fire Resistance Directory are not applicable to the Canadian requirements.

Bruce Mahrenholz, Director North American Certification Program

UL LLC

Any information and documentation involving UL Mark services are provided on behalf of UL LLC (UL) or any authorized licensee of UL. For questions, please contact a local UL Customer Service Representative at http://ul.com/aboutul/locations/

LISTING INFORMATION OF

International Fireproof Technology Inc. - Joint Systems

SPEC ID: 43848

International Fireproof Technology Inc.
17528 Von Karman Avenue

Irvine, CA 92614

This report is for the exclusive use of Intertek's Client and is provided pursuant to the agreement between Intertek and its Client. Intertek's responsibility and liability are limited to the terms and conditions of the agreement. Intertek assumes no liability to any party, other than to the Client in accordance with the agreement, for any loss, expense or damage occasioned by the use of this report. Only the Client is authorized to permit copying or distribution of this report and then only in its entirety. Any use of the Intertek name or one of its marks for the sale or advertisement of the tested material, product or service must first be approved in writing by Intertek. The observations and test results in this report are relevant only to the sample tested. This report by itself does not imply that the material, product, or service is or has ever been under an Intertek certification program.

This specification covers multiple firestop materials manufactured by International Fireproof Technology Inc. See below for individual product descriptions. These products are used, in various combinations to achieve the ratings outline herein. The details of the specfic combinations required will be found in the representative Design Listings and is summarized in the table below.

INSS1186 Elastomeric FireCaulk : INSS1186 Elastomeric FireCaulk is a water based acrylic elastomeric resin material for use on joint systems or firestops. It can be applied by brush, caulking gun, trowel, or airless sprayer. The FireCaulk is available in 310 mL tubes, 1-gallon pails, and 5-gallon pails.

FIRE RATINGS

Test Standard	Products Included	Rating	Design Number
ASTM E1966,	1	T Rating - 120 min., F Rating - 120 min.	**IFT/JF 120-01**
CAN/ULC S115	1	F Rating - 120 min., FT Rating - 120 min., FH Rating - 120 min., FTH Rating - 120 min.	
ASTM E1966,	1	T Rating - 120 min., F Rating - 120 min.	**IFT/JF 120-02**
CAN/ULC S115	1	F Rating - 120 min., FT Rating - 120 min., FH Rating - 120 min., FTH Rating - 120 min.	
ASTM E1966,	1	T Rating - 120 min., F Rating - 120 min.	**IFT/JF 120-03**
CAN/ULC S115	1	F Rating - 120 min., FT Rating - 120 min., FH Rating - 120 min., FTH Rating - 120 min.	
ASTM E1966,	1	T Rating - 120 min., F Rating - 120 min.	**IFT/JF 120-04**
CAN/ULC S115	1	F Rating - 120 min., FT Rating - 120 min., FH Rating - 120 min., FTH Rating - 120 min.	
ASTM E1966,	1	T Rating - 120 min., F Rating - 120 min.	**IFT/JF 120-05**
CAN/ULC S115	1	F Rating - 120 min., FT Rating - 120 min., FH Rating - 120 min., FTH Rating - 120 min.	
ASTM E2307	1	T Rating - 148 min., F Rating - 180 min.	**IFT/BPF 180-01**

Attribute	Value
Criteria	CAN / ULC S115 (2011)
Criteria	ASTM E2307 (2015)
Criteria	ASTM E1966 (2015)
CSI Code	07 84 43 Fire-Resistant Joint Sealants
CSI Code	07 00 00 Thermal and Moisture Protection

CSI Code	07 84 53 Building Perimeter Firestopping
Intertek Services	Certification
Listed or Inspected	LISTED
Listing Section	EXPANSION/SEISMIC JOINTS
Report Number	G102547524; G103082499
Spec ID	43848

DRAWING INDEX

IFT/BPF 180-01
IFT/JF 120-01
IFT/JF 120-02
IFT/JF 120-03
IFT/JF 120-04
IFT/JF 120-05

IFT/BPF 180-01

Total Quality. Assured.

Division 07 – Thermal and Moisture Protection
07 84 00 Firestopping
07 84 53 Building Perimeter Firestopping

International Fireproof Technology
Design No. IFT/BPF 180-01
Perimeter Fire Barrier System
IFTI INSS1186 Elastomeric FireCaulk
ASTM E 2307
Ratings: See Table 1

Table 1

	IFTI INSS1186 Elastomeric FireCaulk
F-Rating	3 Hours
T-Rating	148 Minutes
Application Thickness	1/8 in. wet film
Cycling (%) Horizontal Vertical	 ±12.5% ±5.0%

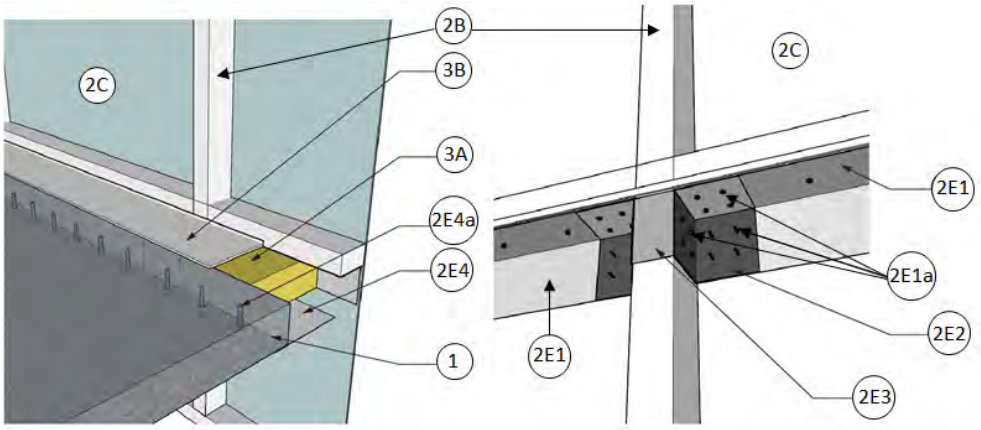

1. **CONCRETE FLOOR ASSEMBLY:** Concrete floor assembly constructed from either lightweight or normal weight concrete with a density of 100 to 150 pcf, having a min. thickness of 4-1/2 in. at the joint face. When a longitudinal recess (blockout) is required to contain an architectural joint system, increase concrete floor assembly thickness to maintain a min. thickness of 4-1/2 in. and accommodate depth of blockout formed in the concrete: blockout width to be a min. of 8 in.

2. **CURTAIN WALL ASSEMBLY:** The curtain wall assembly shall incorporate the following construction features:

   A. MOUNTING ATTACHMENT (Not Shown) – Attach aluminum framing (Item 2B) to the structural framing according to the curtain wall manufacturer's instructions. Connect the mounting attachments to the joint face of the concrete floor assembly (Item 1)

IFT/BPF 180-01 (2 of 3)

according to the curtain wall manufacturer's instructions.

B. ALUMINUM FRAMING – Use hollow rectangular aluminum extruded tubing with min. overall dimensions of 0.100 in. thick, 4 in. high and 2-1/2 in. wide. Locate mullions (vertical aluminum framing) min. 60 in. oc. Locate the transom (horizontal aluminum framing) such that the bottom surface of the transom is at the same height as the top surface of the concrete floor assembly (Item 1).

C. GLASS PANELS – Glass panels shall be sized and installed into aluminum framing (Item 2B) in accordance with the curtain wall manufacturer's instructions. Use min. 1/4 in. thick, clear, heat strengthened (HS) or tempered glass with a max. width and height less than the aluminum framing (Item 2B) oc spacing, which allows glass to be secured to the aluminum framing (Item 2B) between the notched shoulders. Secure glass panels with a thermal break (rubber extrusion), pressure bar (aluminum extrusion), min. 1/4-20 × 5/8 in. long screws, and a snap face (aluminum extrusion).

D. ALUMINUM ANCHOR BRACKETS (Not Shown) – Use min. 1/2 in. thick aluminum anchor brackets to serve as part of the mounting attachment (Item 2A) rigidly secured to the aluminum framing (Item 2B) and the concrete floor assembly (Item 1).

E. STEEL BACK PAN – Assemble a steel back pan to house the mineral wool insulation. The back pan is to be constructed as follows:

i. HORIZONTAL BACK PAN ANGLES – Attach fabricated 18 GA mild steel, 4-1/2 in. high × 3-1/2 in. deep, two at 57-1/4 in. long and two at 20-1/8 in. long (114 mm high × 90 mm deep; two at 1456 mm long and two at 511 mm long), composed of four L-shaped sections to the aluminum framing with No. 8 self-drilling sheet metal screws (Item 2E1a) at 6-1/8 in. oc (157 mm) along the bottom of the transom.

a. FASTENERS – Min. No. 8 self-drilling sheet metal screws

ii. BACK PAN REINFORCEMENT ANGLES – Attach fabricated 18 GA mild steel, 4-3/8 in. high × 3-1/2 in. deep × 4 in. long (111 mm high × 88 mm deep × 100 mm long), composed of eight L-shaped sections installed as end caps to the horizontal back pan angles (Item 2E1) with four No. 8 self-drilling sheet metal screws (Item 2E1a).

iii. FORMED MULLION ATTACHMENT BRACKETS – Attach fabricated 18 GA mild steel, 4-3/8 in. high × 3-1/2 in. deep (111 mm high × 88 mm deep), with flaps at 3-1/2 in. deep × 4 in. long (88 mm deep × 100 mm long), composed of five U-shaped sections installed over the mullions with the flaps inserted between the horizontal back pan angles (Item 2E1) and the back pan reinforcement angles (Item 2E2), using eight No. 8 self-drilling sheet metal screws (Item 2E1a) into the adjoining mullion and transom.

iv. BACK PAN BOTTOM – Attach fabricated 18 GA mild steel, nom. 10 in. wide (two at 57-1/4 in. long and two at 20 in. long), installed under the concrete floor assembly (Item 1), min. 2 in. from the edge of the concrete, aligned such that

IFT/BPF 180-01 (3 of 3)

they are centered between the mullions with nom. 1/4 in. clearance on each side. Secure to the concrete floor assembly (Item 1) using min. 1/4 in. × 2-1/4 in. long concrete anchor bolts (Item 2E4a), spaced nom. 5-1/2 in. (140 mm) oc into the concrete floor assembly, nom. 1 in. from the edge.

b. CONCRETE ANCHORS – Min. 1/4 in. × 2-1/4 in. long

3. **PERIMETER JOINT PROTECTION:** The perimeter joint (linear opening) shall not exceed an 8 in. nom. joint width (joint width at installation). Incorporate the following construction features for the perimeter joint protection (also known as perimeter fire barrier system):

A. PACKING MATERIAL – Use only mineral wool bearing an Intertek certified product label and meeting the following min. requirements: Use min. 5 in. tall, 4 pcf density, mineral wool batt insulation and cut packing material width to achieve nom. 25% compression when installed in the nom. joint width. Install with the fibers running parallel to the concrete floor assembly (Item 1) and curtain wall assembly (Item 2A). Cut sections of mineral wool nom. 3 in. and 5 in. thick, stacked on top of each other. Tightly compress together packing material by using two min. 4-1/2 in. wide × 48 in. long × 16 GA thick steel sheets, using two clamps and achieving a nom. 50% compression. Secure bundle using plastic bands or equivalent. Install compressed bundles side-by-side into the joint space, cutting the bands and removing the compression steel sheets. Align and straighten the packing material flush with the top surface of the concrete floor assembly (Item 1).

B. **CERTIFIED MANUFACTURER:** International Fireproof Technology

CERTIFIED PRODUCT: Firestop Sealant

CERTIFIED MODEL: IFTI INSS1186 Elastomeric FireCaulk

FILL, VOID, OR CAVITY MATERIAL: IFTI INSS1186 Elastomeric FireCaulk to be trowel-applied to cover the packing material (Item 3A). Apply at the thickness specified in Table 1 and overlap the material a min. 1/2 in. onto the adjacent curtain wall assembly and concrete floor slab assembly. Reference Product Section of the Intertek Directory for more details on the Listed product.

IFT/JF 120-01

intertek
Total Quality. Assured.

Division 07 – Thermal and Moisture Protection
07 84 00 Firestopping
07 84 43 Joint Firestopping

International Fireproof Technology
Design No. IFT/JF 120-01
Head of Wall Joint System
IFTI INSS1186 Elastomeric FireCaulk
ASTM E1966-15 and CAN/ULC-S115-11 at 2.5Pa
Rating: T-Rating 2 Hour, F-Rating 2 Hour

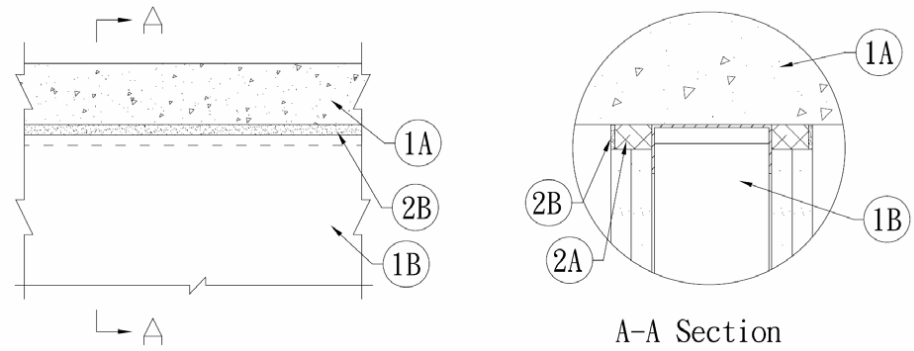

Figure 1. Through Penetration Firestop System

1. **SUPPORTING CONSTRUCTION**:

   A. CONCRETE FLOOR CONSTRUCTION – Min. 4-1/2 in. (114mm) thickness, light or normal weight reinforced concrete having a nominal density of 100 - 150 pcf.

   B. GYPSUM WALLBOARD CONSTRUCTION –
      i. Framing: Min. 25 GA, min. 3-1/2 in. wide, steel channel studs, spaced max. 24 in. on center (oc).
      ii. Floor and ceiling runners (track) of wall assembly shall consist of galvanized steel channels sized to accommodate the studs with min. 1-1/4 in. long flanges.
      iii. Gypsum Board: 5/8 in. thick, Type X, two layers per side.

   Verify compliance of the supporting construction with its corresponding listed design.

2. **FIRE RESISTIVE JOINT SYSTEM:** Install non-loadbearing fire resistive joint system between the top of the gypsum wall supporting construction (Item 1B) and the underside of the concrete floor supporting construction (Item 1A) The joint (linear opening) shall not exceed a 3/4 in. (19mm) nominal joint width (joint width at installation) and the joint treatment shall incorporate the following construction features:

   A. PACKING MATERIAL – Use a min. 4 pcf density mineral wool batt insulation. The total width of mineral wool batt insulation shall fill the width of the joint between the floor assembly and the top of the wall assembly. The thickness of the mineral wool batt insulation shall be larger than the joint and when installed it shall be under 50% compression. Splices (butt joints) in the lengths of mineral wool batt insulation

IFT/JF 120-01 (2 of 2)

are to be tightly compressed together. The packing material covers the exposed surfaces of the gypsum wallboard construction (Item 1B) ceiling runners.

B. FILL, VOID, OR CAVITY MATERIAL – Refer to Figure 1. Apply the following materials as indicated below:

CERTIFIED MANUFACTURER: International Fireproof Technology

CERTIFIED PRODUCT: Firestop Sealant

CERTIFIED MODEL: IFTI INSS1186 Elastomeric FireCaulk

Apply a 1/8 in. (3mm) depth of IFTI INSS1186 Fire Barrier Caulk to cover the exposed surface of the mineral wool packing material (Item 2A) installed in the joint and overlap the material a min. 1/2 in. onto the adjacent gypsum wallboard construction (Item 1B) and the bottom of the concrete floor construction (Item 1A). Tool the surface of the firestop sealant to a smooth finish.

IFT/JF 120-02

Total Quality. Assured.

Division 07 – Thermal and Moisture Protection
07 84 00 Firestopping
07 84 43 Joint Firestopping

International Fireproof Technology
Design No. IFT/JF 120-02
Head of Wall Joint System
IFTI INSS1186 Elastomeric FireCaulk
ASTM E1966-15 and CAN/ULC-S115-11 at 2.5Pa
Rating: T-Rating 2 Hour, F-Rating 2 Hour

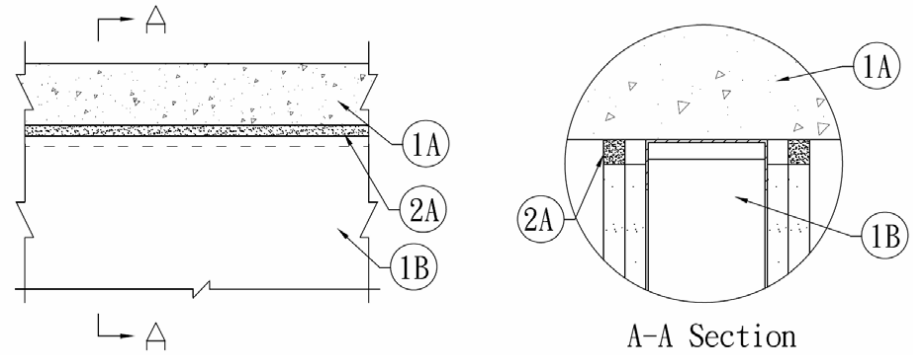

Figure 1. Through Penetration Firestop System

1. **SUPPORTING CONSTRUCTION**:

   A. CONCRETE FLOOR CONSTRUCTION – Min. 4-1/2 in. (114mm) thickness, light or normal weight reinforced concrete having a nominal density of 100 - 150 pcf.

   B. GYPSUM WALLBOARD CONSTRUCTION –
      i. Framing: Min. 25 GA, min. 3-1/2 in. wide, steel channel studs, spaced max. 24 in. on center (oc).
      ii. Floor and ceiling runners (track) of wall assembly shall consist of galvanized steel channels sized to accommodate the studs with min. 1-1/4 in. long flanges.
      iii. Gypsum Board: 5/8 in. thick, Type X, two layers per side.

   Verify compliance of the supporting construction with its corresponding listed design.

2. **FIRE RESISTIVE JOINT SYSTEM:** Install non-loadbearing fire resistive joint system between the top of the gypsum wall supporting construction (Item 1B) and the underside of the concrete floor supporting construction (Item 1A) The joint (linear opening) shall not exceed a 3/4 in. (19mm) nominal joint width (joint width at installation) and the joint treatment shall incorporate the following construction features:

   A. FILL, VOID, OR CAVITY MATERIAL – Refer to Figure 1. Apply the following materials as indicated below:

   CERTIFIED MANUFACTURER: International Fireproof Technology

   CERTIFIED PRODUCT: Firestop Sealant

IFT/JF 120-02 (2 of 2)

Division 07 – Thermal and Moisture Protection
07 84 00 Firestopping
07 84 43 Joint Firestopping

CERTIFIED MODEL: IFTI INSS1186 Elastomeric FireCaulk

Apply a 5/8 in. (16mm) depth of IFTI INSS1186 Fire Barrier Caulk to fill the joint opening to the depth of the outer layer of gypsum board (Item 1B iii) and overlap the material a min. 1/2 in. onto the adjacent gypsum wallboard construction (Item 1B) and the bottom of the concrete floor construction (Item 1A). Tool the surface of the firestop sealant to a smooth finish.

IFT/JF 120-03

intertek
Total Quality. Assured.

Division 07 – Thermal and Moisture Protection
07 84 00 Firestopping
07 84 43 Joint Firestopping

International Fireproof Technology
Design No. IFT/JF 120-03
Head of Wall Joint System
IFTI INSS1186 Elastomeric FireCaulk
ASTM E1966-15 and CAN/ULC-S115-11 at 2.5Pa
Rating: T-Rating 2 Hour, F-Rating 2 Hour
Cycling: Class 2, ± 12.5%

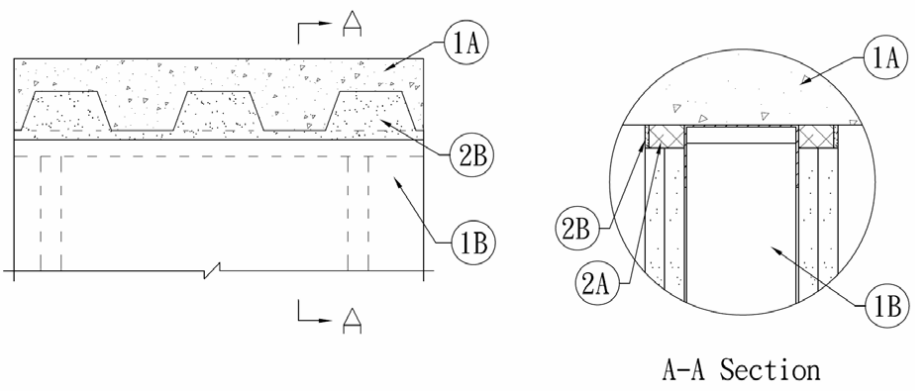

Figure 1. Through Penetration Firestop System

1. **SUPPORTING CONSTRUCTION**:

   A. CONCRETE FLOOR CONSTRUCTION – Min. 5-1/2 in. (140mm) thickness, lightweight reinforced concrete having a nominal density of 100 pcf covering metal decking with a min. of 2-1/2 in. (64mm) clear cover and 3 in. (76mm) deep valleys.

   B. GYPSUM WALLBOARD CONSTRUCTION –
      i. Framing: Min. 25 GA, min. 3-1/2 in. wide, steel channel studs, spaced max. 24 in. on center (oc).
      ii. Floor and ceiling runners (track) of wall assembly shall consist of galvanized steel channels sized to accommodate the studs with min. 1-1/4 in. long flanges.
      iii. Gypsum Board: 5/8 in. thick, Type X, two layers per side.
      iv. The plane of the gypsum wallboard construction is oriented perpendicular to the direction of the flutes in the metal deck of the concrete floor construction (Item 1A).

   Verify compliance of the supporting construction with its corresponding listed design.

2. **FIRE RESISTIVE JOINT SYSTEM:** Install non-loadbearing fire resistive joint system between the top of the gypsum wall supporting construction (Item 1B) and the underside of the concrete floor on metal deck supporting construction (Item 1A). The joint (linear opening) shall not exceed a 3/4 in. (19mm) nominal joint width at the floor decking valleys (joint width at installation) and the joint treatment shall incorporate the following construction features:

IFT/JF 120-03 (2 of 2)

Division 07 – Thermal and Moisture Protection
07 84 00 Firestopping
07 84 43 Joint Firestopping

A. PACKING MATERIAL – Use a min. 4 pcf density mineral wool batt insulation. Cut trapezoidal plugs of mineral wool batt, with a depth of 1-1/4 in. and compress the plugs into the voids between the top of the gypsum wallboard construction (Item 2B) top plate and the underside of the ridges in the metal deck of the concrete floor construction (Item 1A). The plugs shall be compression fit to the outer boundary of the voids and recessed 1/8 in. from the outer face of the gypsum wallboard (Item 1B iii) and the fibers shall run parallel with the deck flutes. Pack mineral wool into the 3/4 in. gap between the top of the gypsum wallboard construction (Item 2B) top plate and the underside of the valleys in the metal deck of the concrete floor construction (Item 1A) and the underside of the previously installed mineral wool plugs. The total width of mineral wool batt insulation shall fill the width of the joint between the floor assembly and the top of the wall assembly. The thickness of the mineral wool batt insulation shall be larger than the joint and when installed it shall be under 50% compression. Splices (butt joints) in the lengths of mineral wool batt insulation are to be tightly compressed together. The packing material covers the exposed surfaces of the gypsum wallboard construction (Item 1B) ceiling runners.

B. FILL, VOID, OR CAVITY MATERIAL – Refer to Figure 1. Apply the following materials as indicated below:

CERTIFIED MANUFACTURER: International Fireproof Technology

CERTIFIED PRODUCT: Firestop Sealant

CERTIFIED MODEL: IFTI INSS1186 Elastomeric FireCaulk

Apply a 1/8 in. (3mm) depth of IFTI INSS1186 Fire Barrier Caulk to cover the exposed surface of the mineral wool packing material (Item 2A) installed in the joint and overlap the material a min. 1/2 in. onto the adjacent gypsum wallboard construction (Item 1B) and the bottom of the metal deck of the concrete floor construction (Item 1A). Tool the surface of the firestop sealant to a smooth finish.

IFT/JF 120-04

Total Quality. Assured.

Division 07 – Thermal and Moisture Protection
07 84 00 Firestopping
07 84 43 Joint Firestopping

International Fireproof Technology
Design No. IFT/JF 120-04
Head of Wall Joint System
IFTI INSS1186 Elastomeric FireCaulk
ASTM E1966-15 and CAN/ULC-S115-11 at 2.5Pa
Rating: T-Rating 2 Hour, F-Rating 2 Hour
Cycling: Class 2, ± 12.5%

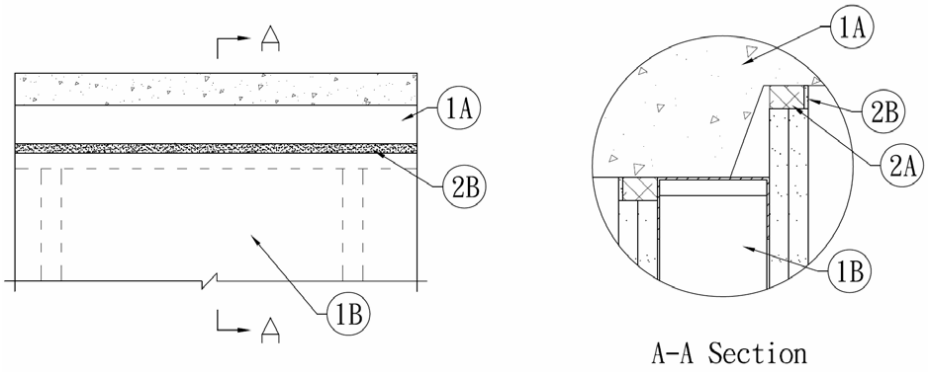

Figure 1. Through Penetration Firestop System

1. SUPPORTING CONSTRUCTION:

A. CONCRETE FLOOR CONSTRUCTION – Min. 5-1/2 in. (140mm) thickness, lightweight reinforced concrete having a nominal density of 100 pcf covering metal decking with a min. of 2-1/2 in. (64mm) clear cover and 3 in. (76mm) deep valleys.

B. GYPSUM WALLBOARD CONSTRUCTION –
   i. Framing: Min. 25 GA, min. 3-1/2 in. wide, steel channel studs, spaced max. 24 in. on center (oc).
   ii. Floor and ceiling runners (track) of wall assembly shall consist of galvanized steel channels sized to accommodate the studs with min. 1-1/4 in. long flanges.
   iii. Gypsum Board: 5/8 in. thick, Type X, two layers per side. The gypsum wallboard shall be extended above the ceiling runners as required to be within 3/4 in. of the underside of the metal deck ridges (see Figure 1).
   iv. The plane of the gypsum wallboard construction is oriented parallel with the direction of the flutes in the metal deck of the concrete floor construction (Item 1A).

Verify compliance of the supporting construction with its corresponding listed design.

2. FIRE RESISTIVE JOINT SYSTEM: Install non-loadbearing fire resistive joint system between the top of the gypsum wall supporting construction (Item 1B) and the underside of the concrete floor on metal deck supporting

IFT/JF 120-04 (2 of 2)

Division 07 – Thermal and Moisture Protection
07 84 00 Firestopping
07 84 43 Joint Firestopping

construction (Item 1A). The joint (linear opening) shall not exceed a 3/4 in. (19mm) nominal joint width (joint width at installation) and the joint treatment shall incorporate the following construction features:

A. PACKING MATERIAL: Use a min. 4 pcf density mineral wool batt insulation. The total width of mineral wool batt insulation shall fill the width of the joint between the floor assembly and the top of the wall assembly. The thickness of the mineral wool batt insulation shall be larger than the joint and when installed it shall be under 50% compression. Splices (butt joints) in the lengths of mineral wool batt insulation are to be tightly compressed together. The packing material covers the exposed surfaces of the gypsum wallboard construction (Item 1B) ceiling runners.

B. FILL, VOID, OR CAVITY MATERIAL**:** Refer to Figure 1. Apply the following materials as indicated below:

CERTIFIED MANUFACTURER: International Fireproof Technology

CERTIFIED PRODUCT: Firestop Sealant

CERTIFIED MODEL: IFTI INSS1186 Elastomeric FireCaulk

Apply a 1/8 in. (3mm) depth of IFTI INSS1186 Fire Barrier Caulk to cover the exposed surface of the mineral wool packing material (Item 2A) installed in the joint and overlap the material a min. 1/2 in. onto the adjacent gypsum wallboard construction (Item 1B) and the bottom of the metal deck of the concrete floor construction (Item 1A). Tool the surface of the firestop sealant to a smooth finish.

IFT/JF 120-05

intertek
Total Quality. Assured.

Division 07 – Thermal and Moisture Protection
07 84 00 Firestopping
07 84 43 Joint Firestopping

International Fireproof Technology
Design No. IFT/JF 120-05
Wall to Wall Joint System
IFTI INSS1186 Elastomeric FireCaulk
ASTM E1966-15 and CAN/ULC-S115-11 at 2.5Pa
Rating: T-Rating 2 Hour, F-Rating 2 Hour

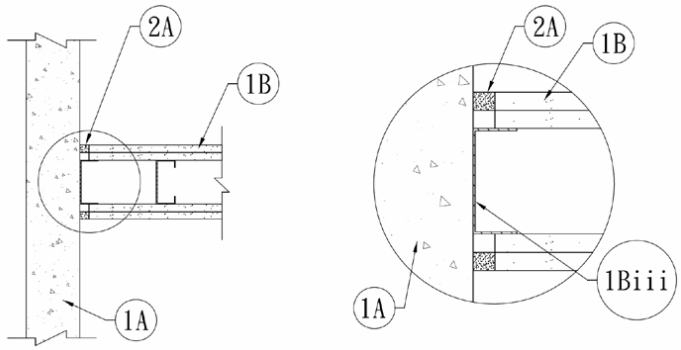

Figure 1. Through Penetration Firestop System

1. SUPPORTING CONSTRUCTION:

A. CONCRETE WALL CONSTRUCTION – Min. 4-1/2 in. (114mm) thickness, light or normal weight reinforced concrete having a nominal density of 100 - 150 pcf.

B. GYPSUM WALLBOARD CONSTRUCTION –
   i. Framing: Min. 25 GA, min. 3-1/2 in. wide, steel channel studs, spaced max. 24 in. on center (oc).
   ii. Floor and ceiling runners (track) of wall assembly shall consist of galvanized steel channels sized to accommodate the studs with min. 1-1/4 in. long flanges.
   iii. Slip Track: Galvanized steel channels sized to accommodate the studs with min. 1-1/4 in. long flanges. To be secured to the concrete wall and left as a slip fill on the gypsum wall assembly.
   iv. Gypsum Board: 5/8 in. thick, Type X, two layers per side.

A linear joint opening is created between a concrete wall construction (Item 1A) and a gypsum wallboard construction (Item 1B) meeting at a 90° angle. The walls are connected by installing a vertical length of slip track (Item 1B iii) to the concrete wall. The gypsum wallboard wall assembly is constructed over this section of track such that a slip-joint is created and the joint gap is established at 3/4 in. between the face of the concrete wall and the edge of the gypsum boards.

Verify compliance of the supporting construction with its corresponding listed design.

IFT/JF 120-05 (2 of 2)

Division 07 – Thermal and Moisture Protection
07 84 00 Firestopping
07 84 43 Joint Firestopping

2. **FIRE RESISTIVE JOINT SYSTEM:** Install non-loadbearing fire resistive joint system between face of the concrete wall construction (Item 1A) and the edge of the gypsum boards in the gypsum wallboard construction (Item 1B) The joint (linear opening) shall not exceed a 3/4 in. (19mm) nominal joint width (joint width at installation) and the joint treatment shall incorporate the following construction features:

   A. FILL, VOID, OR CAVITY MATERIAL**:** Refer to Figure 1. Apply the following materials as indicated below:

      CERTIFIED MANUFACTURER: International Fireproof Technology

      CERTIFIED PRODUCT: Firestop Sealant

      CERTIFIED MODEL: IFTI INSS1186 Elastomeric FireCaulk

      Apply a 5/8 in. (16mm) depth of IFTI INSS1186 Fire Barrier Caulk to fill the joint opening to the depth of the outer layer of gypsum board (Item 1B iii) and overlap the material a min. 1/2 in. onto the adjacent gypsum wallboard construction (Item 1B) and the face of the concrete wall construction (Item 1A). Tool the surface of the firestop sealant to a smooth finish.

LISTING INFORMATION OF

International Fireproof Technology - Firestop Systems

SPEC ID: 42759

International Fireproof Technology Inc.
17528 Von Karman Avenue

Irvine, CA 92614

This report is for the exclusive use of Intertek's Client and is provided pursuant to the agreement between Intertek and its Client. Intertek's responsibility and liability are limited to the terms and conditions of the agreement. Intertek assumes no liability to any party, other than to the Client in accordance with the agreement, for any loss, expense or damage occasioned by the use of this report. Only the Client is authorized to permit copying or distribution of this report and then only in its entirety. Any use of the Intertek name or one of its marks for the sale or advertisement of the tested material, product or service must first be approved in writing by Intertek. The observations and test results in this report are relevant only to the sample tested. This report by itself does not imply that the material, product, or service is or has ever been under an Intertek certification program.

This specification covers multiple firestop materials. See below for individual product descriptions. These products are used in various combinations to achieve the ratings outlined herein. The details of the specfic combinations required will be found in the representative Design Listings and are summarized in the table below.

1) INFS0812 Intumescent Strip : INFS0812 Intumescent Strip is a 5 mm × 60 mm or 5 mm x 80 mm intumescent strip bonded on one side to aluminum foil. It is intended to be wrapped around combustible penetrants, such as plastic pipe.

2) SSCI Firestop Collar : SSCI Firestop Collar is a stainless steel collar intended to be used in conjunction with INFS0812 Intumescent strip to tightly seal a combustible penetrant. This product is intended for nonmetallic pipe, plastic pipe, and insulated pipes. The collars are wrapped around the pipe and secured with a hose clamp. Sizes are available for 2 in. and up to 12 in. nominal pipe diameters.

3) INSS1440 Fire Barrier Caulk : The INSS1440 Fire Barrier Caulk is a single component, water based acrylic intumescent firestop sealant. It can be applied by caulking gun, trowel, or putty knife. The Fire Barrier Caulk is available in 310 mL tubes, 600 mL Sausages, 1 gallon pails, and 5 gallon pails.

4) FP-04+ Firestop Sheet : FP-04+ is a Firestop Sheet fabricated by bonding intumescent materials to a metal sheet. This product is intended to be used for shielding cable trays, conduit, and HVAC equipment. The Firestop sheet is 2 mm thick, available in sheets of 90 cm × 90 cm.

5) FM011 Moldable Firestop Putty : FM011 Moldable Firestop Putty is a one-part, flexible intumescent putty for use on wall or floor openings. The putty is sold in bars and applied by tearing off the required amount of material and plugging the opening, smoothing by hand to ensure a tight seal.

Fire Ratings

Test Standard	Products Included	Rating	Design Number
ASTM E814	1,3	T Rating - 60 min., F Rating - 60 min.	**IFT/PF 60-01**
CAN/ULC S115	1,3	F Rating - 60 min., FT Rating - 60 min., FH Rating - 60 min., FTH Rating - 60 min.	
ASTM E814	1,2,3	T Rating - 59 to 60 min*, F Rating - 60 min. * See Design Listing for Details for each penetrant composition	**IFT/PF 60-02**
CAN/ULC S115	1,2,3	F Rating - 60 min., FT Rating - 59 to 60 min*., FH Rating - 60 min., FTH Rating - 59 to 60 min* * See Design Listing for Details for each penetrant composition	
ASTM E814	1,3	T Rating - 60 min., F Rating - 60 min.	**IFT/PF 60-03**
CAN/ULC S115	1,3	F Rating - 60 min., FT Rating - 60 min., FH Rating - 60 min., FTH Rating - 60 min.	
ASTM E814	5	T Rating - 0 min., F Rating - 0 min.	**IFT/PF 60-**

CAN/ULC S115	5	F Rating - 60 min., FT Rating - 9 min., FH Rating - 0 min., FTH Rating - 0 min.	**04**
ASTM E814	1,2,3	T Rating - 13 to 60 min*, F Rating - 60 min. * See Design Listing for Details for each penetrant composition	**IFT/PF 60-05**
CAN/ULC S115	1,2,3	F Rating - 60 min., FT Rating - 13 to 60 min*., FH Rating - 60 min., FTH Rating - 13 to 60 min* * See Design Listing for Details for each penetrant composition	
ASTM E814	1,2,3,4	T Rating - 60 min., F Rating - 60 min.	**IFT/PF 60-06**
CAN/ULC S115	1,2,3,4	F Rating - 60 min., FT Rating - 60 min., FH Rating - 60 min., FTH Rating - 60 min.	
ASTM E814	1,5	T Rating - 12 min., F Rating - 60 min.	**IFT/PF 60-07**
CAN/ULC S115	1,5	F Rating - 60 min., FT Rating - 12 min. FH Rating - 60 min., FTH Rating - 12 min.	
ASTM E814	5	T Rating - 46 min., F Rating - 60 min.	**IFT/PF 60-08**
CAN/ULC S115	5	F Rating - 60 min., FT Rating - 46 min., FH Rating - 60 min., FTH Rating - 46 min.	
ASTM E814	5	T Rating - 60 min., F Rating - 60 min.	**IFT/PF 60-09**
CAN/ULC S115	5	F Rating - 60 min., FT Rating - 60 min., FH Rating - 60 min., FTH Rating - 60 min.	
ASTM E814	5	T Rating - 0 to 23 min.*, F Rating - 0 to 60 min.* * See Design Listing for Details for each penetrant composition	
CAN/ULC S115	5	F Rating - 60 min., FT Rating - 16 to 23 min*., FH Rating - 0 to 60 min.*, FTH Rating - 0 to 23 min* * See Design Listing for Details for each penetrant composition	**IFT/PF 60-11**
ASTM E814	5	T Rating - 51 to 54 min.*, F Rating - 60 min. * See Design Listing for Details for each penetrant composition	**IFT/PF 60-12**
CAN/ULC S115	5	F Rating - 60 min., FT Rating - 51 to 54 min*., FH Rating - 60 min., FTH Rating - 51 to 54 min* * See Design Listing for Details for each penetrant composition	
ASTM E814	3	T Rating - 60 min., F Rating - 60 min.	

			IFT/PF 60-13
CAN/ULC S115	3	F Rating - 60 min., FT Rating - 60 min., FH Rating - 60 min., FTH Rating - 60 min.	
ASTM E814	1,3	T Rating - 120 min., F Rating - 120 min.	**IFT/PF 120-01**
CAN/ULC S115	1,3	F Rating - 120 min., FT Rating - 120 min., FH Rating - 120 min., FTH Rating - 120 min.	
ASTM E814	1,2,3	T Rating - 102 to 120 min*, F Rating - 120 min. * See Design Listing for Details for each penetrant composition	
CAN/ULC S115	1,2,3	F Rating - 120 min., FT Rating - 102 to 120 min*., FH Rating - 120 min., FTH Rating - 102 to 120 min* * See Design Listing for Details for each penetrant composition	**IFT/PF 120-02**
ASTM E814	1,3	T Rating - 120 min., F Rating - 120 min.	**IFT/PF 120-03**
CAN/ULC S115	1,3	F Rating - 120 min., FT Rating - 120 min., FH Rating - 120 min., FTH Rating - 120 min.	
ASTM E814	5	T Rating - 27 to 120 min*, F Rating - 120 min. * See Design Listing for Details for each penetrant composition	
CAN/ULC S115	5	F Rating - 120 min., FT Rating - 27 to 120 min*., FH Rating - 120 min., FTH Rating - 27 to 120 min* * See Design Listing for Details for each penetrant composition	**IFT/PF 120-04**
ASTM E814	1,2,3	T Rating - 0 min., F Rating - 0 min.	
CAN/ULC S115	1,2,3	F Rating - 120 min., FT Rating - 104 min., FH Rating - 0 min., FTH Rating - 0 min.	**IFT/PF 120-05**
ASTM E814	1,2,3,4	T Rating - 101 min., F Rating - 120 min.	**IFT/PF 120-06**
CAN/ULC S115	1,2,3,4	F Rating - 120 min., FT Rating - 101 min., FH Rating - 120 min., FTH Rating - 101 min.	
ASTM E814	5	T Rating - 16 min., F Rating - 120 min.	**IFT/PF 120-**

CAN/ULC S115	5	F Rating - 120 min., FT Rating - 16 min., FH Rating - 120 min., FTH Rating - 16 min.	**08**
ASTM E814	5	T Rating - 120 min., F Rating - 120 min.	**IFT/PF 120-09**
CAN/ULC S115	5	F Rating - 120 min., FT Rating - 120 min., FH Rating - 120 min., FTH Rating - 120 min.	
ASTM E814	1,2,3	T Rating - 120 min., F Rating - 120 min.	**IFT/PF 120-10**
CAN/ULC S115	1,2,3	F Rating - 120 min., FT Rating - 120 min., FH Rating - 120 min., FTH Rating - 120 min.	
ASTM E814	5	T Rating - 12 to 24 min.*, F Rating - 120 min. * See Design Listing for Details for each penetrant composition	
CAN/ULC S115	5	F Rating - 120 min., FT Rating - 12 to 24 min*., FH Rating - 120 min., FTH Rating - 12 to 24 min* * See Design Listing for Details for each penetrant composition	**IFT/PF 120-11**
ASTM E814	5	T Rating - 68 to 91 min*, F Rating - 120 min. * See Design Listing for Details for each penetrant composition	
CAN/ULC S115	5	F Rating -120 min., FT Rating - 68 to 91 min*., FH Rating - 120 min., FTH Rating - 68 to 91 min* * See Design Listing for Details for each penetrant composition	**IFT/PF 120-12**
ASTM E814	3	T Rating - 120 min., F Rating - 120 min.	**IFT/PF 120-13**
CAN/ULC S115	3	F Rating - 120 min., FT Rating - 120 min., FH Rating - 120 min., FTH Rating - 120 min.	
ASTM E814	1,3	T Rating - 120 min., F Rating - 120 min.	**IFT/PF 120-14**
CAN/ULC S115	1,3	F Rating - 120 min., FT Rating - 120 min., FH Rating - 120 min., FTH Rating - 120 min.	
ASTM E814	1,3	T Rating - 120 min., F Rating - 120 min.	**IFT/PF 120-15**
CAN/ULC S115	1,3	F Rating - 120 min., FT Rating - 120 min., FH Rating - 120 min., FTH Rating - 120 min.	
ASTM E814	1,3	T Rating - 0 to 120 min*, F Rating - 0 to 120 min.* * See Design Listing for Details for each penetrant composition	

CAN/ULC S115	1,3	F Rating -120 min., FT Rating - 118 to 120 min*., FH Rating - 0 to 120 min.*, FTH Rating - 0 to 120 min* * See Design Listing for Details for each penetrant composition	**IFT/PF 120-16**
ASTM E814	1,2,3,4	T Rating - 120 min., F Rating - 120 min.	**IFT/PF 120-17**
CAN/ULC S115	1,2,3,4	F Rating - 120 min., FT Rating - 120 min., FH Rating - 120 min., FTH Rating - 120 min.	
ASTM E814	1,2,3,4	T Rating - 120 min., F Rating - 120 min.	**IFT/PF 120-18**
CAN/ULC S115	1,2,3,4	F Rating - 120 min., FT Rating - 120 min., FH Rating - 120 min., FTH Rating - 120 min.	
ASTM E814	1,2,5	T Rating - 120 min., F Rating - 120 min.	**IFT/PF 120-19**
CAN/ULC S115	1,2,5	F Rating - 120 min., FT Rating - 120 min., FH Rating - 120 min., FTH Rating - 120 min.	
ASTM E814	3	T Rating - 0 min., F Rating - 0 min.	**IFT/PF 120-20**
CAN/ULC S115	3	F Rating - 120 min., FT Rating - 18 min., FH Rating - 0 min., FTH Rating - 0 min.	
ASTM E814	1,3	T Rating - 82 min., F Rating - 120 min.	**IFT/PF 120-21**
CAN/ULC S115	1,3	F Rating - 120 min., FT Rating - 82 min., FH Rating - 120 min., FTH Rating - 82 min.	
ASTM E814	4	T Rating - 120 min., F Rating - 120 min.	**IFT/PF 120-22**
CAN/ULC S115	4	F Rating - 120 min., FT Rating - 120 min., FH Rating - 120 min., FTH Rating - 120 min.	

Attribute	Value
Criteria	CAN / ULC S115 (2011)
Criteria	ASTM E814-13a (2017)
CSI Code	07 84 00 Firestopping
CSI Code	07 84 13 Penetration Firestopping
CSI Code	07 00 00 Thermal and Moisture Protection
Intertek Services	Certification
Listed or Inspected	LISTED
Listing Section	FIRESTOP SYSTEMS

Report Number	G102547524
Spec ID	42759

DRAWING INDEX

IFT/PF 120-01
IFT/PF 120-02
IFT/PF 120-03
IFT/PF 120-04
IFT/PF 120-05
IFT/PF 120-06
IFT/PF 120-08
IFT/PF 120-09
IFT/PF 120-10
IFT/PF 120-11
IFT/PF 120-12
IFT/PF 120-13
IFT/PF 120-14
IFT/PF 120-15
IFT/PF 120-16
IFT/PF 120-17
IFT/PF 120-18
IFT/PF 120-19
IFT/PF 120-21
IFT/PF 120-22
IFT/PF 60-01
IFT/PF 60-02
IFT/PF 60-03
IFT/PF 60-04
IFT/PF 60-05
IFT/PF 60-06
IFT/PF 60-07
IFT/PF 60-08
IFT/PF 60-09
IFT/PF 60-11
IFT/PF 60-12
IFT/PF 60-13

IFT/PF 120-01

intertek
Total Quality. Assured.

Division 07 – Thermal and Moisture Protection
07 84 00 Firestopping
07 84 13 Penetration Firestopping

International Fireproof Technology
Design No. IFT/PF 120-01
Through Penetration Firestop System
IFTI INFS0812 Intumescent Strip and IFTI INSS1440 Fire Barrier Caulk
ASTM E814-13a (2017) and CAN/ULC-S115-11 at 2.5 Pa
Rating: See Table 1

Penetrating Item Material (Sch 40 or thinner)	Max. Pipe Dia. (in.)	Max. Dia. of Opening (in. [mm])	Annular Space in. (mm)		Min. INFS0812 Thick x Height (mm)	INSS1440 Depth in. (mm)	Rating (min)					
							ASTM E814		CAN/ULC S115			
			Min.	Max.			T	F	F	FT	FH	FTH
PVC	4	5-1/2 (140)	3/8 (10)	5/8 (16)	2 @ 5 x 60	1/8 (3)	120	120	120	120	120	120
RNC	4	5-1/2 (140)	3/8 (10)	5/8 (16)	2 @ 5 x 60	1/8 (3)	120	120	120	120	120	120
ABS	4	5-1/2 (140)	3/8 (10)	5/8 (16)	2 @ 5 x 60	1/8 (3)	120	120	120	120	120	120

Table 1. Through Penetration Firestop System Installation Details and Ratings

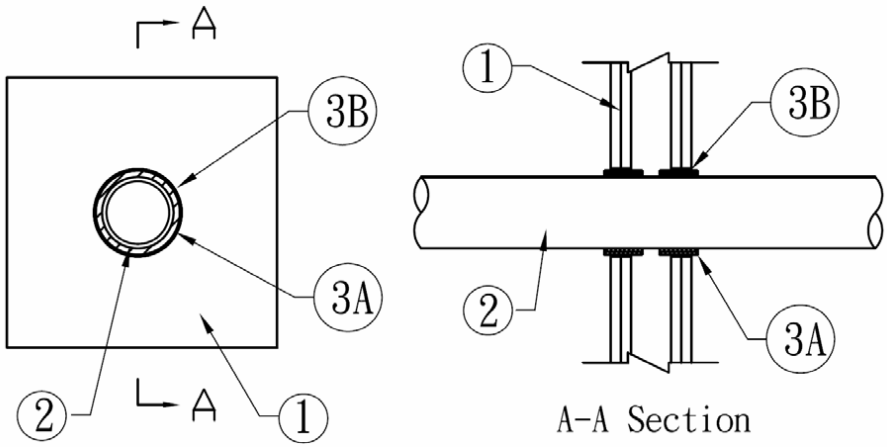

Figure 1. Through Penetration Firestop System

1. **SUPPORTING CONSTRUCTION:** Refer to Figure 1. Opening size shall be 1 in. larger than the OD of the penetrating pipe. Create a round through-opening in a symmetrical, Code-conforming, 2 hour fire-rated wall assembly consisting of the min. construction features of one of the following options:

A. GYPSUM WALLBOARD CONSTRUCTION –
   i. Framing: Nominal 2x4 wood studs or min. 25 GA, min. 3-1/2 in. wide, steel channel studs, spaced max. 24 in. on center (oc).
   ii. Gypsum Board: 5/8 in. thick Type X, two layers per side.

IFT/PF 120-01 (2 of 2)

B. CONCRETE CONSTRUCTION – Min. 6 in. (152mm) thickness, lightweight or normal weight reinforced concrete having a nominal density of 100-150 pcf.

C. CONCRETE MASONRY UNIT (CMU) CONSTRUCTION – Nominal 8 in. (203mm) thick concrete blocks (filled or unfilled).

Verify compliance of the supporting construction with its corresponding listed design.

2. **PENETRATING ITEM:** Refer to Figure 1 and Table 1. Position a max. 4 in. diameter plastic pipe in the opening made in the Supporting Construction (Item 1). Use any of the following pipe types in Schedule 40 or thinner: ABS, PVC, or RNC. Establish an annular space, per Table 1, between the Penetrating Item and the Supporting Construction (Item 1).

3. **FILL, VOID, OR CAVITY MATERIAL:** Refer to Figure 1 and Table 1. Apply the following materials as indicated below:

A. **CERTIFIED MANUFACTURER:** International Fireproof Technology

CERTIFIED PRODUCT: Intumescent Strip

CERTIFIED MODEL: IFTI INFS0812

Apply two individual layers of nominal 5mm thick IFTI INFS0812 Intumescent Strip, each tightly wrapped around the Penetrating Item (Item 2) on both sides of the Supporting Construction (Item 1). Secure the IFTI INFS0812 Intumescent Strips with aluminum foil tape, and position them in the annular space such that the top of the IFTI INFS0812 Intumescent Strips are 10mm beyond the outer surface of the Supporting Construction (Item 1) on both sides. See Table 1 for required width of intumescent strip.

B. **CERTIFIED MANUFACTURER:** International Fireproof Technology

CERTIFIED PRODUCT: Firestop Sealant

CERTIFIED MODEL: IFTI INSS1440 Fire Barrier Caulk

Apply a 1/8 in. (3mm) bead of IFTI INSS1440 Fire Barrier Caulk around the interface of the INFS0812 Intumescent Strips (Item 3B) and the Supporting Construction (Item 1), in the remaining annular space. Tool the surface of the firestop sealant to a smooth finish.

IFT/PF 120-02

intertek
Total Quality. Assured.

Division 07 – Thermal and Moisture Protection
07 84 00 Firestopping
07 84 13 Penetration Firestopping

International Fireproof Technology
Design No. IFT/PF 120-02
Through Penetration Firestop System
IFTI SSCI Firestop Collar, IFTI INFS0812 Intumescent Strip and IFTI INSS1440 Fire Barrier Caulk
ASTM E814-13a (2017) and CAN/ULC-S115-11 at 50 Pa
Rating: See Table 1

Penetrating Item Material (Sch 40 or thinner)	Max. Pipe Dia. (in.)	Max. Dia. of Opening (in. [mm])	Annular Space (in. [mm])		Min. SSCI-X Collar Height (mm)	Min. INFS0812 Thick x Height (mm)	INSS1440 Depth (in. [mm])	Rating (min)					
								ASTM E814		CAN/ULC S115			
			Min.	Max.				T	F	F	FT	FH	FTH
PVC	4	5 (127)	0 (0)	1/2 (13)	60	2 @ 5 x 60	1/8 (3)	120	120	120	120	120	120
RNC	4	5 (127)	0 (0)	1/2 (13)	60	2 @ 5 x 60	1/8 (3)	120	120	120	120	120	120
ABS	4	5 (127)	0 (0)	1/2 (13)	60	2 @ 5 x 60	1/8 (3)	107	120	120	107	120	107
PPR	4	5 (127)	0 (0)	1/2 (13)	80	2 @ 5 x 80	1/8 (3)	106	120	120	106	120	106
XFR	4	5 (127)	0 (0)	1/2 (13)	80	2 @ 5 x 80	1/8 (3)	106	120	120	106	120	106
CPVC	4	5 (127)	0 (0)	1/2 (13)	80	2 @ 5 x 80	1/8 (3)	102	120	120	102	120	102

Table 1. Through Penetration Firestop System Installation Details and Ratings

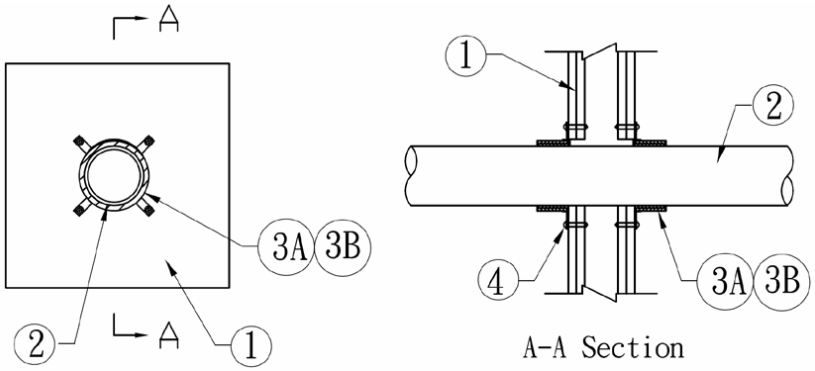

Figure 1. Through Penetration Firestop System

1. **SUPPORTING CONSTRUCTION:** Refer to Figure 1. Opening size shall be 1/2 in. larger than the OD of the penetrating pipe. Create a round through-opening in a symmetrical, Code-conforming, 2 hour fire-rated wall assembly consisting of the min. construction features of one of the following options:

IFT/PF 120-02 (2 of 3)

A. GYPSUM WALLBOARD CONSTRUCTION –
   i. Framing: Nominal 2x4 wood studs or min. 25 GA, min. 3-1/2 in. wide, steel channel studs, spaced max. 24 in. on center (oc).
   ii. Gypsum Board: 5/8 in. thick Type X, two layers per side.

B. CONCRETE CONSTRUCTION – Min. 6 in. (152mm) thickness, lightweight or normal weight reinforced concrete having a nominal density of 100-150 pcf.

C. CONCRETE MASONRY UNIT (CMU) CONSTRUCTION – Nominal 8 in. (203mm) thick concrete blocks (filled or unfilled).

Verify compliance of the supporting construction with its corresponding listed design.

2. PENETRATING ITEM: Refer to Figure 1 and Table 1. Position a max. 4 in. diameter plastic pipe in the opening made in the Supporting Construction (Item 1). Use any of the following pipe types in Schedule 40 or thinner: ABS, PPR, XFR, CPVC, PVC, or RNC. Establish an annular space, per Table 1, between the Penetrating Item and the Supporting Construction (Item 1).

3. FILL, VOID, OR CAVITY MATERIAL: Refer to Figure 1 and Table 1. Apply the following materials as indicated below:

A. **CERTIFIED MANUFACTURER:** International Fireproof Technology

CERTIFIED PRODUCT: Intumescent Strip

CERTIFIED MODEL: IFTI INFS0812

Apply two individual layers of nominal 5mm thick IFTI INFS0812 Intumescent Strip, each tightly wrapped around the Penetrating Item (Item 2) on both sides of the Supporting Construction (Item 1). Secure the IFTI INFS0812 Intumescent Strips with aluminum foil tape, and butt them against the Supporting Construction (Item 1) on both sides. See Table 1 for required height of intumescent strip. The IFTI INFS0812 Intumescent Strip can be either bulk packaged and cut to fit or part of a SSCI Firestop Collar kit with all components required for installation, packaged together.

B. **CERTIFIED MANUFACTURER:** International Fireproof Technology

CERTIFIED PRODUCT: Firestop Collar

CERTIFIED MODEL: IFTI SSCI Firestop Collar

Install an IFTI SSCI-X Firestop Collar sized appropriately for the Penetrating Item (Item 1) over the two layers of IFTI INFS0812 Intumescent Strip (Item 3A) on each side of the Supporting Construction (Item 1) using the supplied clamp. Secure each using 3/16 in. diameter fasteners of appropriate length for the specific Supporting Construction (Item 1) and 1-1/2 in. diameter, steel, flat washers. Use toggle bolts in gypsum based Supporting Construction (Item 1) and concrete anchors in concreted based Supporting Construction (Item 1). Use between three and four fasteners, as appropriate for the size of the Penetrating Item (Item 2). See Table 1 for required collar height. The IFTI SSCI Firestop Collar can be either bulk packaged and cut to fit or part of a SSCI Firestop Collar kit with all components required for installation, packaged together.

IFT/PF 120-02 (3 of 3)

Division 07 – Thermal and Moisture Protection
07 84 00 Firestopping
07 84 13 Penetration Firestopping

C. **CERTIFIED MANUFACTURER:** International Fireproof Technology

CERTIFIED PRODUCT: Firestop Sealant

CERTIFIED MODEL: IFTI INSS1440 Fire Barrier Caulk

(Not Shown) Apply a 1/8 in. (3mm) bead of IFTI INSS1440 Fire Barrier Caulk around the interface of the Firestop Collars (Item 3B) and the Supporting Construction (Item 1). Tool the surface of the firestop sealant to a smooth finish.

IFT/PF 120-03

intertek
Total Quality. Assured.

Division 07 – Thermal and Moisture Protection
07 84 00 Firestopping
07 84 13 Penetration Firestopping

International Fireproof Technology
Design No. IFT/PF 120-03
Through Penetration Firestop System
IFTI INFS0812 Intumescent Strip and IFTI INSS1440 Fire Barrier Caulk
ASTM E814-13a (2017) and CAN/ULC-S115-11 at 50 Pa
Rating: See Table 1

Penetrating Item Material (Sch 40 or thinner)	Max. Pipe Dia. (in.)	Max. Dia. of Opening (in. [mm])	Annular Space (in. [mm])		Min. INFS0812 Thick x Height (mm)	INSS1440 Depth (in. [mm])	Rating (min)					
							ASTM E814		CAN/ULC S115			
			Min.	Max.			T	F	F	FT	FH	FTH
PVC	2	3 (76)	3/16 (5)	7/16 (11)	1 @ 5 x 60	1/8 (3)	120	120	120	120	120	120
RNC	2	3 (76)	3/16 (5)	7/16 (11)	1 @ 5 x 60	1/8 (3)	120	120	120	120	120	120
ABS	2	3 (76)	3/16 (5)	7/16 (11)	1 @ 5 x 60	1/8 (3)	120	120	120	120	120	120

Table 1. Through Penetration Firestop System Installation Details and Ratings

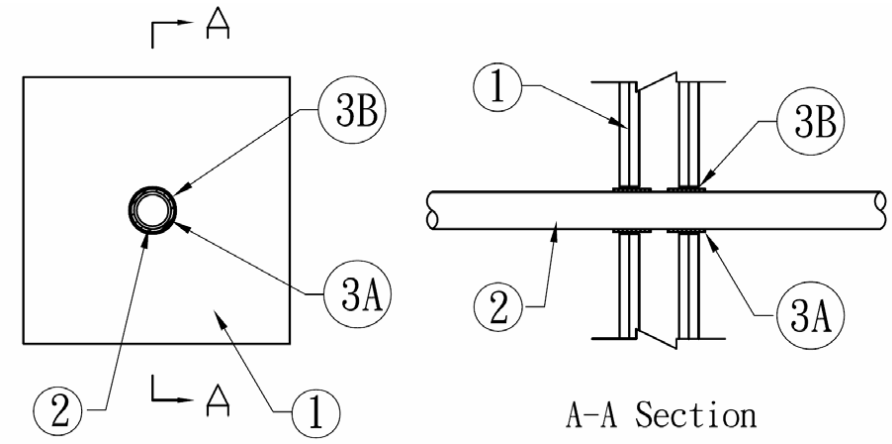

Figure 1. Through Penetration Firestop System

1. **SUPPORTING CONSTRUCTION:** Refer to Figure 1. Opening size shall be 5/8 in. larger than the OD of the penetrating pipe. Create a round through-opening in a symmetrical, Code-conforming, 2 hour fire-rated wall assembly consisting of the min. construction features of one of the following options:

A. GYPSUM WALLBOARD CONSTRUCTION –
   i. Framing: Nominal 2x4 wood studs or min. 25 GA, min. 3-1/2 in. wide, steel channel studs, spaced max. 24 in. on center (oc).
   ii. Gypsum Board: 5/8 in. thick Type X, two layers per side.

IFT/PF 120-03 (2 of 2)

B. CONCRETE CONSTRUCTION – Min. 6 in. (152mm) thickness, lightweight or normal weight reinforced concrete having a nominal density of 100-150 pcf.

C. CONCRETE MASONRY UNIT (CMU) CONSTRUCTION – Nominal 8 in. (203mm) thick concrete blocks (filled or unfilled).

Verify compliance of the supporting construction with its corresponding listed design.

2. PENETRATING ITEM: Refer to Figure 1 and Table 1. Position a max. 2 in. diameter plastic pipe in the opening made in the Supporting Construction (Item 1). Use any of the following pipe types in Schedule 40 or thinner: ABS, PVC, or RNC. Establish an annular space, per Table 1, between the Penetrating Item and the Supporting Construction (Item 1).

3. FILL, VOID, OR CAVITY MATERIAL: Refer to Figure 1 and Table 1. Apply the following materials as indicated below:

A. **CERTIFIED MANUFACTURER:** International Fireproof Technology

CERTIFIED PRODUCT: Intumescent Strip

CERTIFIED MODEL: IFTI INFS0812

Apply one individual layer of nominal 5mm thick IFTI INFS0812 Intumescent Strip, tightly wrapped around the Penetrating Item (Item 2) on both sides of the Supporting Construction (Item 1). Secure the IFTI INFS0812 Intumescent Strips with aluminum foil tape, and position them in the annular space such that the top of the IFTI INFS0812 Intumescent Strips are 10mm beyond the outer surface of the Supporting Construction (Item 1) on both sides. See Table 1 for required width of intumescent strip.

B. **CERTIFIED MANUFACTURER:** International Fireproof Technology

CERTIFIED PRODUCT: Firestop Sealant

CERTIFIED MODEL: IFTI INSS1440 Fire Barrier Caulk

Apply a 1/8 in. (3mm) bead of IFTI INSS1440 Fire Barrier Caulk around the interface of the INFS0812 Intumescent Strips (Item 3A) and the Supporting Construction (Item 1), in the remaining annular space. Tool the surface of the firestop sealant to a smooth finish.

IFT/PF 120-04

intertek
Total Quality. Assured.

Division 07 – Thermal and Moisture Protection
07 84 00 Firestopping
07 84 13 Penetration Firestopping

International Fireproof Technology
Design No. IFT/PF 120-04
Through Penetration Firestop System
IFTI FM011 Moldable Firestop Putty
ASTM E814-13a (2017) and CAN/ULC-S115-11 at 2.5 Pa
Rating: See Table 1

Penetrating Item Material (Sch 40 or thinner)	Max. Pipe Dia. (in.)	Max. Dia. of Opening (in. [mm])	Annular Space (in. [mm])		FM011 Depth (in. [mm])	Rating (min)					
						ASTM E814		CAN/ULC S115			
			Min.	Max.		T	F	F	FT	FH	FTH
PVC	2	3-1/2 (89)	1/8 (3)	1 (25.4)	1-1/4 (32)	120	120	120	120	120	120
CPVC	2	3-1/2 (89)	1/8 (3)	1 (25.4)	1-1/4 (32)	27	120	120	27	120	27
ABS	2	3-1/2 (89)	1/8 (3)	1 (25.4)	1-1/4 (32)	120	120	120	120	120	120

Table 1. Through Penetration Firestop System Installation Details and Ratings

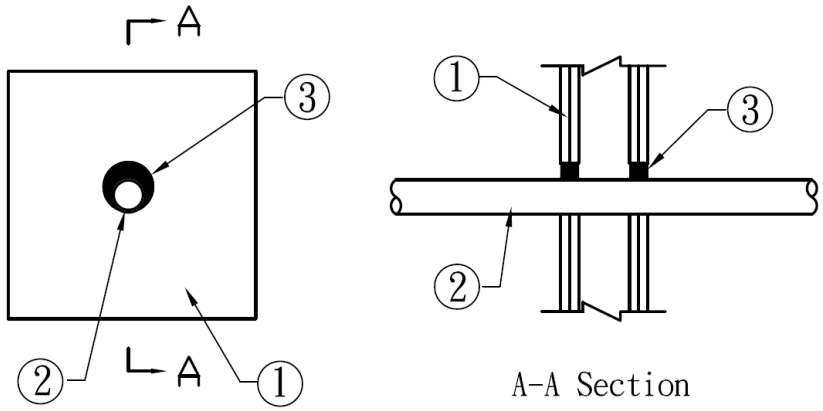

Figure 1. Through Penetration Firestop System

1. **SUPPORTING CONSTRUCTION:** Refer to Figure 1. Opening size shall be 1-1/8 in. larger than the OD of the penetrating pipe. Create a round through-opening in a symmetrical, Code-conforming, 2 hour fire-rated wall assembly consisting of the minimum construction features of one of the following options:

A. GYPSUM WALLBOARD CONSTRUCTION –
   i. Framing: Nominal 2x4 wood studs or min. 25 GA, min. 3-1/2 in. wide, steel channel studs, spaced max. 24 in. on center (oc).
   ii. Gypsum Board: 5/8 in. thick Type X, two layers per side.

IFT/PF 120-04 (2 of 2)

Division 07 – Thermal and Moisture Protection
07 84 00 Firestopping
07 84 13 Penetration Firestopping

B. CONCRETE CONSTRUCTION – Min. 6 in. (152mm) thickness, lightweight or normal weight reinforced concrete having a nominal density of 100-150 pcf.

C. CONCRETE MASONRY UNIT (CMU) CONSTRUCTION – Nominal 8 in. (203mm) thick concrete blocks (filled or unfilled).

Verify compliance of the supporting construction with its corresponding listed design.

2. **PENETRATING ITEM:** Refer to Figure 1 and Table 1. Position a max. 2 in. diameter plastic pipe in the opening made in the Supporting Construction (Item 1). Use any of the following pipe types in Schedule 40 or thinner: ABS, PVC, or CPVC. Establish an annular space, per Table 1, between the Penetrating Item and the Supporting Construction (Item 1).

3. **FILL, VOID, OR CAVITY MATERIAL:** Refer to Figure 1 and Table 1. Apply the following materials as indicated below:

CERTIFIED MANUFACTURER: International Fireproof Technology

CERTIFIED PRODUCT: Firestop Putty

CERTIFIED MODEL: IFTI FM011 Moldable Firestop Putty

Ensure application area is clean and free of oil, loose dirt, rust, or scale. See Table 1 for required width and depth of moldable putty. Apply the appropriate amount of IFTI FM011 Moldable Firestop Putty around the interface of the Penetrating Item (Item 2) and the Supporting Construction (Item 1), in the remaining annular space on both sides of the Supporting Construction (Item 1). Smooth the surface of the firestop putty by hand to ensure complete contact with the Supporting Construction (Item 1) and the Penetrating Item (Item 2) and an airtight seal.

IFT/PF 120-05

intertek
Total Quality. Assured.

Division 07 – Thermal and Moisture Protection
07 84 00 Firestopping
07 84 13 Penetration Firestopping

International Fireproof Technology
Design No. IFT/PF 120-05
Through Penetration Firestop System
IFTI SSCI Firestop Collar
IFTI INFS0812 Intumescent Strip and IFTI INSS1440 Fire Barrier Caulk
ASTM E814-13a (2017) and CAN/ULC-S115-11 at 50 Pa
Rating: See Table 1

Penetrating Item Material (Sch 40 or thinner)	Max. Pipe Dia. (in.)	Max. Dia. of Opening (in. [mm])	Annular Space (in. [mm])		Min. SSCI-X Collar Height (mm)	Min. INFS0812 Thick x Height (mm)	INSS1440 Depth (in. [mm])	Rating (min)					
								ASTM E814		CAN/ULC S115			
			Min.	Max.				T	F	F	FT	FH	FTH
PVC	6	7 (178)	0 (0)	1/2 (13)	80	3 @ 5 x 80	1/8 (3)	0	0	120	104	0	0
ABS	6	7 (178)	0 (0)	1/2 (13)	80	3 @ 5 x 80	1/8 (3)	0	0	120	104	0	0

Table 1. Through Penetration Firestop System Installation Details and Ratings

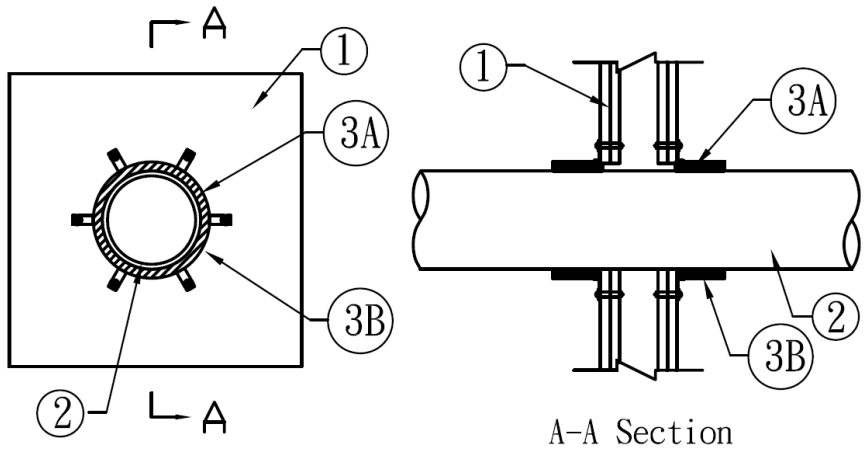

Figure 1. Through Penetration Firestop System

1. **SUPPORTING CONSTRUCTION:** Refer to Figure 1. Opening size shall be 1/2 in. larger than the OD of the penetrating pipe. Create a round through-opening in a symmetrical, Code-conforming, 2 hour fire-rated wall assembly consisting of the min. construction features of one of the following options:

A. GYPSUM WALLBOARD CONSTRUCTION –
   i. Framing: Nominal 2x4 wood studs or min. 25 GA, min. 3-1/2 in. wide, steel channel studs, spaced max. 24 in. on center (oc).
   ii. Gypsum Board: 5/8 in. thick Type X, two layers per side.

IFT/PF 120-05 (2 of 2)

B. CONCRETE CONSTRUCTION – Min. 6 in. (152mm) thickness, lightweight or normal weight reinforced concrete having a nominal density of 100-150 pcf.

C. CONCRETE MASONRY UNIT (CMU) CONSTRUCTION – Nominal 8 in. (203mm) thick concrete blocks (filled or unfilled).

Verify compliance of the supporting construction with its corresponding listed design.

2. **PENETRATING ITEM:** Refer to Figure 1 and Table 1. Position a max. 6 in. diameter plastic pipe in the opening made in the Supporting Construction (Item 1). Use any of the following pipe types in Schedule 40 or thinner: ABS or PVC. Establish an annular space, per Table 1, between the Penetrating Item and the Supporting Construction (Item 1).

3. **FILL, VOID, OR CAVITY MATERIAL:** Refer to Figure 1 and Table 1. Apply the following materials as indicated below:

A. **CERTIFIED MANUFACTURER:** International Fireproof Technology

CERTIFIED PRODUCT: Intumescent Strip

CERTIFIED MODEL: IFTI INFS0812

Apply three individual layers of nominal 5mm thick IFTI INFS0812 Intumescent Strip, each tightly wrapped around the Penetrating Item (Item 2) on both sides of the Supporting Construction (Item 1). Secure the IFTI INFS0812 Intumescent Strips with aluminum foil tape, and butt them against the Supporting Construction (Item 1) on both sides. See Table 1 for required height of intumescent strip. The IFTI INFS0812 Intumescent Strip can be either bulk packaged and cut to fit or part of a SSCI Firestop Collar kit with all components required for installation, packaged together.

B. **CERTIFIED MANUFACTURER:** International Fireproof Technology

CERTIFIED PRODUCT: Firestop Collar

CERTIFIED MODEL: IFTI SSCI Firestop Collar

Install an IFTI SSCI-X Firestop Collar sized appropriately for the Penetrating Item (Item 1) over the three layers of IFTI INFS0812 Intumescent Strip (Item 3A) on each side of the Supporting Construction (Item 1) using the supplied clamp. Secure each using 3/16 in. diameter fasteners of appropriate length for the specific Supporting Construction (Item 1) and 1-1/2 in. diameter, steel, flat washers. Use toggle bolts in gypsum based Supporting Construction (Item 1) and concrete anchors in concrete based Supporting Construction (Item 1). Use between three and six fasteners, as appropriate for the size of the Penetrating Item (Item 2). See Table 1 for required collar height. The IFTI SSCI Firestop Collar can be either bulk packaged and cut to fit or part of a SSCI Firestop Collar kit with all components required for installation, packaged together.

C. **CERTIFIED MANUFACTURER:** International Fireproof Technology

CERTIFIED PRODUCT: Firestop Sealant

CERTIFIED MODEL: IFTI INSS1440 Fire Barrier Caulk

(Not Shown) Apply a 1/8 in. (3mm) bead of IFTI INSS1440 Fire Barrier Caulk around the interface of the Firestop Collars (Item 3B) and the Supporting Construction (Item 1). Tool the surface of the firestop sealant to a smooth finish.

IFT/PF 120-06

intertek
Total Quality. Assured.

Division 07 – Thermal and Moisture Protection
07 84 00 Firestopping
07 84 13 Penetration Firestopping

International Fireproof Technology
Design No. IFT/PF 120-06
Through Penetration Firestop System
IFTI INSS1440 Fire Barrier Caulk, IFTI FP-04+ Firestop Sheet, IFTI INFS0812 Intumescent Strip, and IFTI SSCI Firestop Collar
ASTM E814-13a (2017) and CAN/ULC-S115-11 at 50 Pa
Ratings: See Table 1

Penetrating Item Material (Sch 40 or thinner)	Max. Pipe Dia. (in.)	Size of Opening W x H in. (mm)	Min. SSCI-X Collar Height (mm)	Min. INFS0812 Thick x Height (mm)	INSS1440 Depth in. (mm)	Rating (min)					
						ASTM E814		CAN/ULC S115			
						T	F	F	FT	FH	FTH
XFR, PPR, ABS, or PVC	3 (76)	24 x 24 (610 x 610)	60	2 @ 5 x 60	1/8 (3)	101	120	120	101	120	101
PVC	6 (152)		80	3 @ 5 x 80	1/8 (3)						
ABS or PVC	4 (102)		60	2 @ 5 x 60	1/8 (3)						

Table 1. Through Penetration Firestop System Installation Details and Ratings

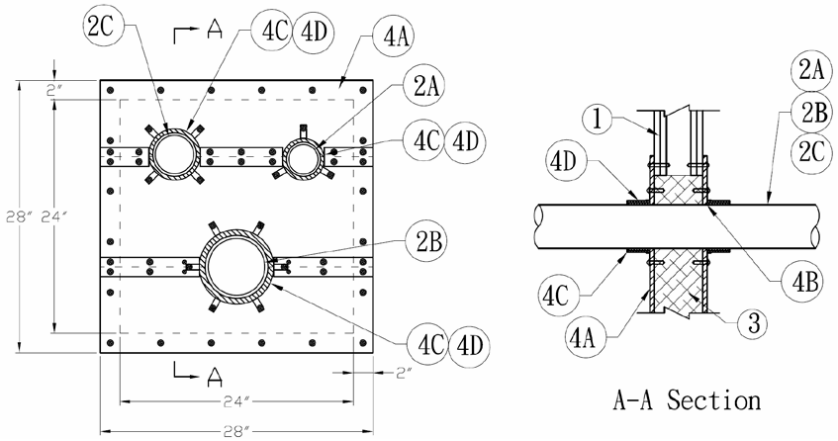

Figure 1. Through Penetration Firestop System

1. **SUPPORTING CONSTRUCTION:** Refer to Figure 1. Create a 24 in. (610mm) square, framed through-opening in a symmetrical, Code-conforming, 2 hour fire-rated wall assembly consisting of the min. construction features of one of the following options:

A. GYPSUM WALLBOARD CONSTRUCTION –
   i. Framing: Nominal 2x4 wood studs or min. 25 GA, min. 3-1/2 in. wide, steel channel studs, spaced max. 24-in. on center (oc).
   ii. Gypsum Board: 5/8 in. thick Type X, two layers per side.

IFT/PF 120-06 (2 of 3)

B. CONCRETE CONSTRUCTION – Min. 6 in. (152mm) thickness, lightweight or normal weight, reinforced concrete having a nominal density of 100-150 pcf.

C. CONCRETE MASONRY UNIT (CMU) CONSTRUCTION – Nominal 8 in. (203mm) thick concrete blocks (filled or unfilled).

Verify compliance of the supporting construction with its corresponding listed design.

2. PENETRATING ITEMS: Refer to Figure 1 and Table 1.

A. Position a nominal 3 in. diameter plastic pipe in the opening made in the Supporting Construction (Item 1). Establish an annular space of 2 in. (max.) between the Penetrating Item and the right and top edges of the framed opening in the Supporting Construction (Item 1). Use any of the following pipe types in Schedule 40 or thinner: XFR, PPR, ABS, or PVC.

B. Position a nominal 6 in. diameter plastic pipe, centered horizontally in the opening made in the Supporting Construction (Item 1). Establish an annular space of 2 in. (max.) between the Penetrating Item and the bottom edge of the framed opening in the Supporting Construction (Item 1). Use any of the following pipe types in Schedule 40 or thinner: PVC.

C. Position an additional nominal 4 in. diameter plastic pipe in the opening made in the Supporting Construction (Item 1). Establish an annular space of 2 in. (max.) between the Penetrating Item and the left and top edges of the framed opening in the Supporting Construction (Item 1). Use any of the following pipe types in Schedule 40 or thinner: ABS or PVC.

3. PACKING MATERIAL: Refer to Figure 1 and Table 1. Apply the following materials as indicated below:

Completely fill the annular space around the Penetrating Items (Item 2) and the Supporting Construction (Item 1) with tightly packed mineral wool with a min. density of 4 pcf (64 kg/m^3). Mineral wool is to be installed by stacking layers cut to the width of the wall and compressed 50% during installation. The fibers are to be oriented such that the factory surfaces of the mineral wool material cut from batts are oriented horizontally, parallel with the plane of the floor.

4. FILL, VOID, OR CAVITY MATERIAL: Refer to Figure 1 and Table 1. Apply the following materials as indicated below

A. **CERTIFIED MANUFACTURER:** International Fireproof Technology

CERTIFIED PRODUCT: Intumescent Sheet

CERTIFIED MODEL: IFTI FP-04+ Firestop Sheet

Cut a 28 in. (711mm) square section of IFTI FP-04+ Firestop Sheet and center it over the opening on both side of the Supporting Construction (Item 1). Secure the Intumescent Sheet to both sides of the Supporting Construction (Item 1) using #10 x 3-1/2 in. (89mm) wood screws (or similar fasteners appropriate to the Support Construction (Item 1)) around perimeter of intumescent sheet, spaced 1 in. (25mm) in from the edge of the intumescent sheet and nominally 6 in. (152mm) oc along each side. Provide openings for each Penetrating Item (Item 2) in the Intumescent Sheet on each side for each of the three penetrating items. The Intumescent Sheet shall be cut along the nominal horizontal centerline of

IFT/PF 120-06 (3 of 3)

the Penetrating Items (Item 2) to allow for installation. Install a nominal 2 in. wide strip of Intumescent Sheet centered over each horizontal seam and secure each strip using #8 x 1 in. (25mm) self-tapping screws, nominally every 6 in. on each side of the seam.

B. **CERTIFIED MANUFACTURER:** International Fireproof Technology

CERTIFIED PRODUCT: Firestop Sealant

CERTIFIED MODEL: IFTI INSS1440 Fire Barrier Caulk

(Not Shown) Apply a 1/8 in. (3mm) bead of IFTI INSS1440 Fire Barrier Caulk around the perimeter of each side of the framed opening created in the Supporting Construction (Item 1) prior to installation of the Intumescent Sheet (Item 4A).

(Not Shown) Apply a 1/8 in. (3mm) bead of IFTI INSS1440 Fire Barrier Caulk nominally 1/2 in. above and below the seams in the Intumescent Sheet (Item 4A) prior to installation of the Intumescent Sheet strips over the seams.

Apply a 1/8 in. (3mm) bead of IFTI INSS1440 Fire Barrier Caulk around the interface of each of the Penetrating Items (Item 2) and the Intumescent Sheet (Item 4A). Tool the surface of the firestop sealant to a smooth finish.

C. **CERTIFIED MANUFACTURER:** International Fireproof Technology

CERTIFIED PRODUCT: Intumescent Strip

CERTIFIED MODEL: IFTI INFS0812

Refer to Figure 1 and Table 1. Apply two or three individual layers of nominal 5mm thick IFTI INFS0812 Intumescent Strip, each tightly wrapped around the appropriate Penetrating Item (Item 2) on both sides of the Supporting Construction (Item 1). Secure the IFTI INFS0812 Intumescent Strips with aluminum foil tape and butt them against the Intumescent Sheet (Item 4A) on both sides. See Table 1. for required height of intumescent strip. The IFTI INFS0812 Intumescent Strip can be either bulk packaged and cut to fit or part of a SSCI Firestop Collar kit with all components required for installation, packaged together.

D. **CERTIFIED MANUFACTURER:** International Fireproof Technology

CERTIFIED PRODUCT: Firestop Collar

CERTIFIED MODEL: IFTI SSCI Firestop Collar

Refer to Figure 1 and Table 1. Install a 6 in., 4 in., or 3 in. IFTI SSCI-X Firestop Collar over the two or three layers of IFTI INFS0812 Intumescent Strip (Item 4C), as appropriate, on each side of the Supporting Construction (Item 1) using the supplied clamps. Secure each using three, four, or six #8 x 1 in. (25mm) self-tapping screws. See Table 1. for required collar height. The IFTI SSCI Firestop Collar can be either bulk packaged and cut to fit or part of a SSCI Firestop Collar kit with all components required for installation, packaged together.

IFT/PF 120-08

intertek
Total Quality. Assured.

Division 07 – Thermal and Moisture Protection
07 84 00 Firestopping
07 84 13 Penetration Firestopping

International Fireproof Technology
Design No. IFT/PF 120-08
Through Penetration Firestop System
IFTI FM011 Moldable Firestop Putty
ASTM E814-13a (2017) and CAN/ULC-S115-11 at 2.5 Pa
Rating: See Table 1

Penetrating Item Material	Max. Pipe Dia. (in.)	Max. Dia. of Opening (in. [mm])	Annular Space in. (mm)		FM011 Depth in. (mm)	Rating (min)					
						ASTM E814		CAN/ULC S115			
			Min.	Max.		T	F	F	FT	FH	FTH
PEX	1	2 (51)	1/8 (3)	9/16 (14)	1-1/4 (32)	16	120	120	16	120	16

Table 1. Through Penetration Firestop System Installation Details and Ratings

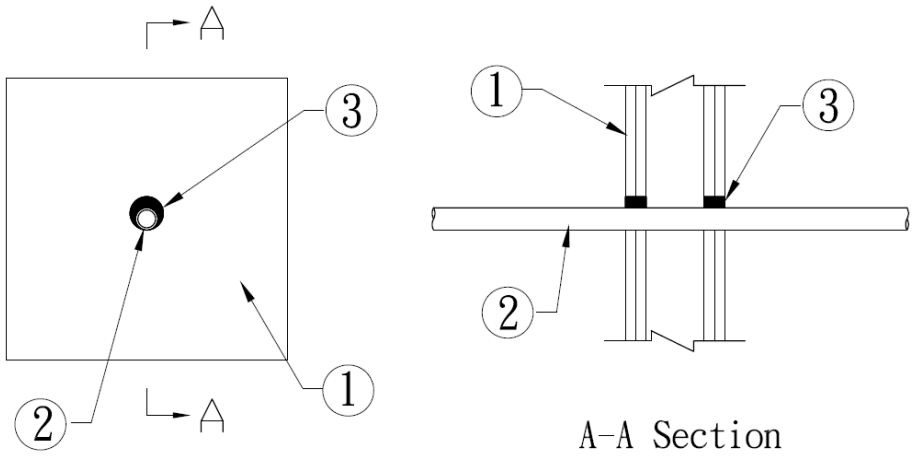

Figure 1. Through Penetration Firestop System

1. **SUPPORTING CONSTRUCTION:** Refer to Figure 1. Opening size shall be 11/16 in. larger than the OD of the penetrating pipe. Create a round through-opening in a symmetrical, Code-conforming, 2 hour fire-rated wall assembly consisting of the min. construction features of one of the following options:

A. GYPSUM WALLBOARD CONSTRUCTION -
   i. Framing: Nominal 2x4 wood studs or min. 25 GA, min. 3-1/2 in. wide, steel channel studs, spaced max. 24 in. on center (oc).
   ii. Gypsum Board: 5/8 in. thick Type X, two layers per side.

IFT/PF 120-08 (2 of 2)

Division 07 – Thermal and Moisture Protection
07 84 00 Firestopping
07 84 13 Penetration Firestopping

B. CONCRETE CONSTRUCTION – Min. 6 in. (152mm) thickness, lightweight or normal weight reinforced concrete having a nominal density of 100-150 pcf.

C. CONCRETE MASONRY UNIT (CMU) CONSTRUCTION – Nominal 8 in. (203mm) thick concrete blocks (filled or unfilled).

Verify compliance of the supporting construction with its corresponding listed design.

2. **PENETRATING ITEM:** Refer to Figure 1 and Table 1. Position a max. 1 in. diameter plastic pipe in the opening made in the Supporting Construction (Item 1). Use any of the following pipe types: PEX. Establish an annular space, per Table 1, between the Penetrating Item and the Supporting Construction (Item 1).

3. **FILL, VOID, OR CAVITY MATERIAL:** Refer to Figure 1 and Table 1. Apply the following materials as indicated below:

CERTIFIED MANUFACTURER: International Fireproof Technology

CERTIFIED PRODUCT: Firestop Putty

CERTIFIED MODEL: IFTI FM011 Moldable Firestop Putty

Ensure application area is clean and free of oil, loose dirt, rust, or scale. See Table 1 for required width and depth of moldable putty. Apply the appropriate amount of IFTI FM011 Moldable Firestop Putty around the interface of the Penetrating Item (Item 2) and the Supporting Construction (Item 1), in the remaining annular space on both sides of the Supporting Construction (Item 1). Smooth the surface of the firestop putty by hand to ensure complete contact with the Supporting Construction (Item 1) and the Penetrating Item (Item 2) and an airtight seal.

IFT/PF 120-09

intertek
Total Quality. Assured.

Division 07 – Thermal and Moisture Protection
07 84 00 Firestopping
07 84 13 Penetration Firestopping

International Fireproof Technology
Design No. IFT/PF 120-09
Through Penetration Firestop System
IFTI FM011 Moldable Firestop Putty
ASTM E814-13a (2017) and CAN/ULC-S115-11 at 2.5 Pa
Rating: See Table 1

Penetrating Item Material (Sch 40 or thinner)	Max. Pipe Dia. (in.)	Max. Dia. of Opening (in. [mm])	Annular Space in. (mm)		FM011 Depth in. (mm)	Rating (min)					
						ASTM E814		CAN/ULC S115			
			Min.	Max.		T	F	F	FT	FH	FTH
ABS	1-1/2	3 (76)	1/8 (3)	1 (25.4)	1-1/4 (32)	120	120	120	120	120	120
PVC	1-1/2	3 (76)	1/8 (3)	1 (25.4)	1-1/4 (32)	120	120	120	120	120	120
RNC	1-1/2	3 (76)	1/8 (3)	1 (25.4)	1-1/4 (32)	120	120	120	120	120	120

Table 1. Through Penetration Firestop System Installation Details and Ratings

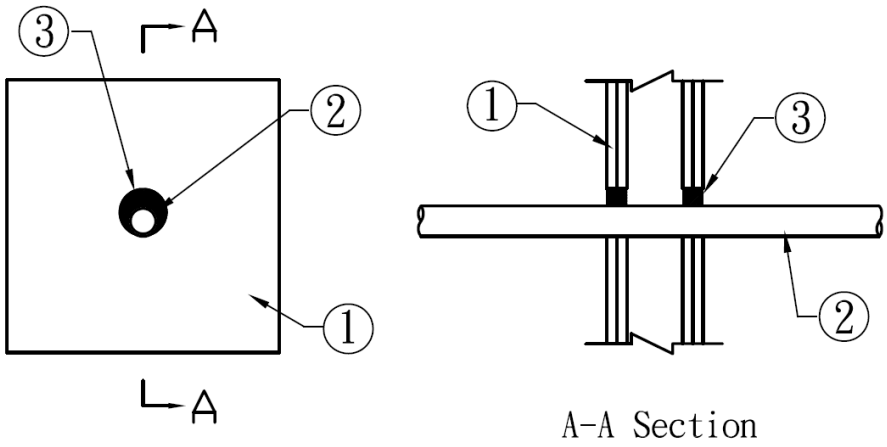

Figure 1. Through Penetration Firestop System

1. **SUPPORTING CONSTRUCTION:** Refer to Figure 1. Opening size shall be 1-1/8 in. larger than the OD of the penetrating pipe. Create a round through-opening in a symmetrical, Code-conforming, 2 hour fire-rated wall assembly consisting of the min. construction features of one of the following options:

A. GYPSUM WALLBOARD CONSTRUCTION –
   i. Framing: Nominal 2x4 wood studs or min. 25 GA, min. 3-1/2 in. wide, steel channel studs, spaced max. 24 in. on center (oc).
   ii. Gypsum Board: 5/8 in. thick Type X, two layers per side.

IFT/PF 120-09 (2 of 2)

Division 07 – Thermal and Moisture Protection
07 84 00 Firestopping
07 84 13 Penetration Firestopping

B. CONCRETE CONSTRUCTION – Min. 6 in. (152mm) thickness, lightweight or normal weight reinforced concrete having a nominal density of 100-150 pcf.

C. CONCRETE MASONRY UNIT (CMU) CONSTRUCTION – Nominal 8 in. (203mm) thick concrete blocks (filled or unfilled).

Verify compliance of the supporting construction with its corresponding listed design.

2. **PENETRATING ITEM:** Refer to Figure 1 and Table 1. Position a max. 1-1/2 in. diameter plastic pipe in the opening made in the Supporting Construction (Item 1). Use any of the following pipe types in Schedule 40 or thinner: ABS, PVC, or RNC. Establish an annular space, per Table 1, between the Penetrating Item and the Supporting Construction (Item 1).

3. **FILL, VOID, OR CAVITY MATERIAL:** Refer to Figure 1 and Table 1. Apply the following materials as indicated below:

CERTIFIED MANUFACTURER: International Fireproof Technology

CERTIFIED PRODUCT: Firestop Putty

CERTIFIED MODEL: IFTI FM011 Moldable Firestop Putty

Ensure application area is clean and free of oil, loose dirt, rust, or scale. See Table 1 for required width and depth of moldable putty. Apply the appropriate amount of IFTI FM011 Moldable Firestop Putty around the interface of the Penetrating Item (Item 2) and the Supporting Construction (Item 1), in the remaining annular space on both sides of the Supporting Construction (Item 1). Smooth the surface of the firestop putty by hand to ensure complete contact with the Supporting Construction (Item 1) and the Penetrating Item (Item 2) and an airtight seal.

IFT/PF 120-10

intertek
Total Quality. Assured.

Division 07 – Thermal and Moisture Protection
07 84 00 Firestopping
07 84 13 Penetration Firestopping

International Fireproof Technology
Design No. IFT/PF 120-10
Through Penetration Firestop System
IFTI SSCI Firestop Collar, IFTI INFS0812 Intumescent Strip and IFTI INSS1440 Fire Barrier Caulk
ASTM E814-13a (2017) and CAN/ULC-S115-11 at 50 Pa
Rating: See Table 1

Penetrating Item Material (Sch 40 or thinner)	Max. Pipe Dia. (in.)	Max. Dia. of Opening (in. [mm])	Annular Space (in. [mm])		Min. SSCI-X Collar Height (mm)	Min. INFS0812 Thick x Height (mm)	INSS1440 Depth (in. [mm])	Rating (min)					
								ASTM E814		CAN/ULC S115			
			Min.	Max.				T	F	F	FT	FH	FTH
XFR	2	3 (76)	0 (0)	5/8 (16)	60	1 @ 5 x 60	1/8 (3)	120	120	120	120	120	120
PPR	2	3 (76)	0 (0)	5/8 (16)	60	1 @ 5 x 60	1/8 (3)	120	120	120	120	120	120
ABS	2	3 (76)	0 (0)	5/8 (16)	60	1 @ 5 x 60	1/8 (3)	120	120	120	120	120	120
PVC	2	3 (76)	0 (0)	5/8 (16)	60	1 @ 5 x 60	1/8 (3)	120	120	120	120	120	120
RNC	2	3 (76)	0 (0)	5/8 (16)	60	1 @ 5 x 60	1/8 (3)	120	120	120	120	120	120

Table 1. Through Penetration Firestop System Installation Details and Ratings

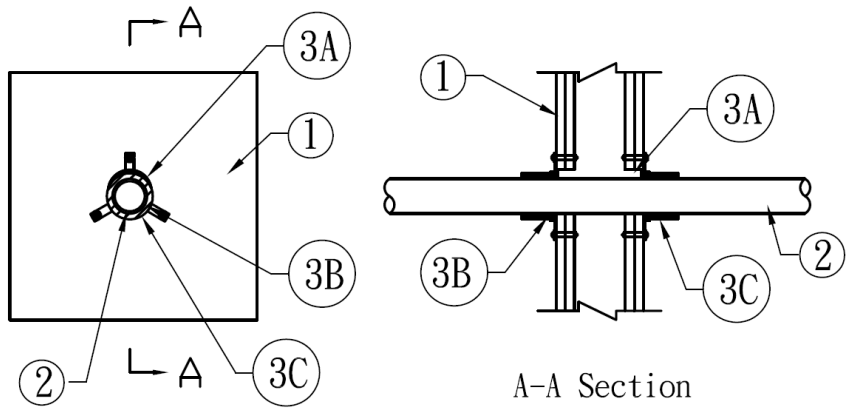

Figure 1. Through Penetration Firestop System

1. **SUPPORTING CONSTRUCTION:** Refer to Figure 1. Opening size shall be 5/8 in. larger than the OD of the penetrating pipe. Create a round through-opening in a symmetrical, Code-conforming, 2 hour fire-rated wall assembly consisting of the min. construction features of one of the following options:

A. GYPSUM WALLBOARD CONSTRUCTION –
   i. Framing: Nominal 2x4 wood studs or min. 25 GA, min. 3-1/2 in. wide, steel channel studs, spaced max. 24 in. on center (oc).
   ii. Gypsum Board: 5/8 in. thick Type X, two layers per side.

IFT/PF 120-10 (2 of 2)

B. CONCRETE CONSTRUCTION – Min. 6 in. (152mm) thickness, lightweight or normal weight reinforced concrete having a nominal density of 100-150 pcf.

C. CONCRETE MASONRY UNIT (CMU) CONSTRUCTION – Nominal 8 in. (203mm) thick concrete blocks (filled or unfilled)

Verify compliance of the supporting construction with its corresponding listed design.

2. **PENETRATING ITEM:** Refer to Figure 1 and Table 1. Position a max. 2 in. diameter plastic pipe in the opening made in the Supporting Construction (Item 1). Use any of the following pipe types in Schedule 40 or thinner: XFR, PPR, ABS, PVC, RNC. Establish an annular space, per Table 1, between the Penetrating Item and the Supporting Construction (Item 1).

3. **FILL, VOID, OR CAVITY MATERIAL:** Refer to Figure 1 and Table 1. Apply the following materials as indicated below:

A. **CERTIFIED MANUFACTURER:** International Fireproof Technology

CERTIFIED PRODUCT: Firestop Sealant

CERTIFIED MODEL: IFTI INSS1440 Fire Barrier Caulk

Apply a 1/8 in. (3mm) depth of IFTI INSS1440 Fire Barrier Caulk around the interface of the Penetrating Item (Item 2) and the Supporting Construction (Item 1) on both sides of the Supporting Construction (Item 1). Tool the surface of the firestop sealant to a smooth finish.

B. **CERTIFIED MANUFACTURER:** International Fireproof Technology

Division 07 – Thermal and Moisture Protection
07 84 00 Firestopping
07 84 13 Penetration Firestopping

CERTIFIED PRODUCT: Intumescent Strip

CERTIFIED MODEL: IFTI INFS0812

Apply one individual layer of nominal 5mm thick IFTI INFS0812 Intumescent Strip, tightly wrapped around the Penetrating Item (Item 2) on both sides of the Supporting Construction (Item 1). Secure the IFTI INFS0812 Intumescent Strips with aluminum foil tape, and butt them against the Firestop Sealant (Item 3A) on both sides. See Table 1 for required height of intumescent strip. The IFTI INFS0812 Intumescent Strip can be either bulk packaged and cut to fit or part of a SSCI Firestop Collar kit with all components required for installation, packaged together.

C. **CERTIFIED MANUFACTURER:** International Fireproof Technology

CERTIFIED PRODUCT: Firestop Collar

CERTIFIED MODEL: IFTI SSCI Firestop Collar

Install an IFTI SSCI-X Firestop Collar sized appropriately for the Penetrating Item (Item 1) over the one layer of IFTI INFS0812 Intumescent Strip (Item 3B) on each side of the Supporting Construction (Item 1) using the supplied clamp. Secure each using three 3/16 in. diameter fasteners of appropriate length for the specific Supporting Construction (Item 1) and 1-1/2 in. diameter, steel, flat washers. Use toggle bolts in gypsum based Supporting Construction (Item 1) and concrete anchors in concrete based Supporting Construction (Item 1). See Table 1 for required collar height. The IFTI SSCI Firestop Collar can be either bulk packaged and cut to fit or part of a SSCI Firestop Collar kit with all components required for installation, packaged together.

IFT/PF 120-11

intertek
Total Quality. Assured.

Division 07 – Thermal and Moisture Protection
07 84 00 Firestopping
07 84 13 Penetration Firestopping

International Fireproof Technology
Design No. IFT/PF 120-11
Through Penetration Firestop System
IFTI FM011 Moldable Firestop Putty
ASTM E814-13a (2017) and CAN/ULC-S115-11 at 2.5 Pa
Ratings: See Table 1

Penetrating Item Material	Nom. Pipe Dia. (in.)	Dia. of Opening (in. [mm])	Annular Space (in. [mm])		FM011 Depth (in. [mm])	Rating (min)					
						ASTM E814		CAN/ULC S115			
			Min.	Max.		T	F	F	FT	FH	FTH
Sch 40 Steel / Iron	30	32 (813)	1/8 (3)	1-7/8 (48)	1-1/4 (32)	24	120	120	24	120	24
Steel Conduit	6	8 (203)	1/8 (3)	1-7/8 (48)	1-1/4 (32)	12	120	120	12	120	12
Copper	6	8 (203)	1/8 (3)	1-7/8 (48)	1-1/4 (32)	12	120	120	12	120	12
EMT	4	6 (152)	1/8 (3)	1-7/8 (48)	1-1/4 (32)	16	120	120	16	120	16

Table 1. Through Penetration Firestop System Installation Details and Ratings

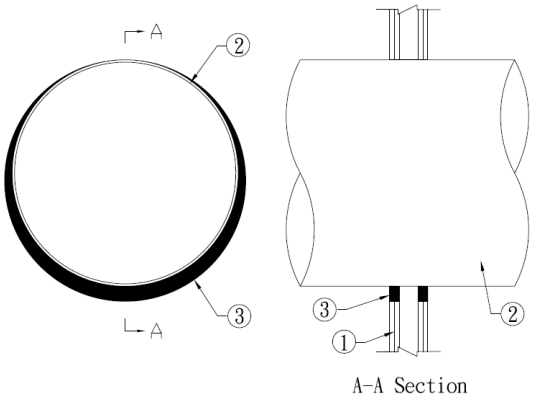

A-A Section

Figure 1. Through Penetration Firestop System

1. **SUPPORTING CONSTRUCTION:** Refer to Figure 1 and Table 1. Create a round through-opening in a symmetrical, Code-conforming, 2 hour fire-rated wall assembly with one of the following min. construction features:

A. GYPSUM WALLBOARD CONSTRUCTION –
   i. Framing: Nominal 2×4 wood studs or min. 25 GA, min. 3-1/2 in. wide, steel channel studs, spaced max. 24 in. on center (oc).
   ii. Gypsum Board: 5/8 in. thick, Type X, two layers per side.

IFT/PF 120-11 (2 of 2)

Division 07 – Thermal and Moisture Protection
07 84 00 Firestopping
07 84 13 Penetration Firestopping

B. CONCRETE CONSTRUCTION – Min. 6 in. (152mm) thickness, lightweight or normal weight, reinforced concrete having a nominal density of 100-150 pcf.

C. CONCRETE MASONRY UNIT (CMU) CONSTRUCTION – Nominal 8 in. (203mm) thick concrete blocks (filled or unfilled).

Verify compliance of the supporting construction with its corresponding listed design.

2. **PENETRATING ITEM:** Refer to Figure 1 and Table 1. Position specified penetrating item in the opening made in the Supporting Construction (Item 1). Establish an annular space, per Table 1, between the Penetrating Item and the Supporting Construction (Item 1).

3. **FILL, VOID, OR CAVITY MATERIAL:** Refer to Figure 1 and Table 1. Apply the following materials as indicated below:

CERTIFIED MANUFACTURER: International Fireproof Technology

CERTIFIED PRODUCT: Firestop Putty

CERTIFIED MODEL: IFTI FM011 Moldable Firestop Putty

Ensure application area is clean and free of oil, loose dirt, rust, or scale. See Table 1. for required width and depth of moldable putty. Apply the appropriate amount of IFTI FM011 Moldable Firestop Putty around the interface of the Penetrating Item (Item 2) and the Supporting Construction (Item 1), in the remaining annular space on both sides of the Supporting Construction (Item 1). Smooth the surface of the firestop putty by hand to ensure complete contact with the Supporting Construction (Item 1) and the Penetrating Item (Item 2) and an airtight seal.

IFT/PF 120-12

intertek
Total Quality. Assured.

Division 07 – Thermal and Moisture Protection
07 84 00 Firestopping
07 84 13 Penetration Firestopping

International Fireproof Technology
Design No. IFT/PF 120-12
Through Penetration Firestop System
IFTI FM011 Moldable Firestop Putty
ASTM E814-13a (2017) and CAN/ULC-S115-11 at 2.5 Pa
Rating: See Table 1

Penetrating Item Material	Max. Pipe Dia. (in.)	Pipe Insulation Thickness in. (mm)	Max. Dia. of Opening in. (mm)	Annular Space (in. [mm])		FM011 Depth (in. [mm])	Rating (min)					
							ASTM E814		CAN/ULC S115			
				Min.	Max.		T	F	F	FT	FH	FTH
Copper	6	1 (25)	10 (254)	1/8 (3)	1-7/8 (48)	5/8 (16)	68	120	120	68	120	68
Steel / Iron	6	1 (25)	10 (254)	1/8 (3)	1-7/8 (48)	5/8 (16)	68	120	120	68	120	68
Copper	6	1-1/2 (38)	10 (254)	1/8 (3)	7/8 (22)	5/8 (16)	91	120	120	91	120	91
Steel / Iron	6	1-1/2 (38)	10 (254)	1/8 (3)	7/8 (22)	5/8 (16)	91	120	120	91	120	91

Table 1. Through Penetration Firestop System Installation Details and Ratings

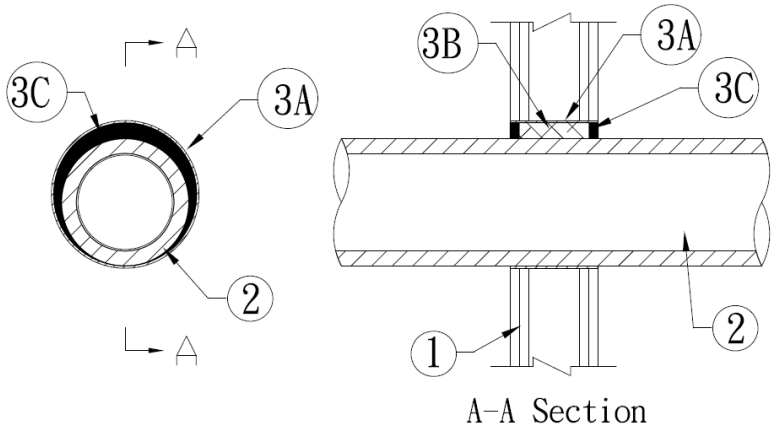

Figure 1. Through Penetration Firestop System

1. **SUPPORTING CONSTRUCTION:** Refer to Figure 1. Opening size shall be 4 in. larger than the OD of the uninsulated penetrating pipe. Create a round through-opening in a symmetrical, Code-conforming, 2 hour fire-rated wall assembly consisting of the min. construction features of one of the following options:

A. GYPSUM WALLBOARD CONSTRUCTION –

i. Framing: Nominal 2x4 wood studs or min. 25 GA, min. 3-1/2 in. wide, steel channel studs, spaced max. 24 in. on center (oc).

ii. Gypsum Board: 5/8 in. thick Type X, two layers per side.

IFT/PF 120-12 (2 of 2)

B. CONCRETE CONSTRUCTION – Min. 6 in. (152mm) thickness, lightweight or normal weight reinforced concrete having a nominal density of 100-150 pcf.

C. CONCRETE MASONRY UNIT (CMU) CONSTRUCTION – Nominal 8 in. (203mm) thick concrete blocks (filled or unfilled).

Verify compliance of the supporting construction with its corresponding listed design.

2. **PENETRATING ITEM:** Refer to Figure 1 and Table 1. Position max. 6 in. diameter pipe with the specified thickness of fiberglass pipe insulation with foil scrim, in the opening made in the Supporting Construction (Item 1). Use any of the following pipe types in Schedule 40 or thicker: Copper (Type L), Steel, Ductile Iron, Cast Iron. Establish an annular space, per Table 1, between the Penetrating Item and the Supporting Construction (Item 1).

3. **FILL, VOID, OR CAVITY MATERIAL:** Refer to Figure 1 and Table 1. Apply the following materials as indicated below:

A. METALLIC SLEEVE – Install a galvanized steel (25 GA min.) in the full depth of the Supporting Construction (Item 1), tightly contacting the walls of the opening.

B. Completely fill the annular space around the Penetrating Item (Item 2) and the Metallic Sleeve (Item 3A) with tightly packed mineral wool with a min. density of 4 pcf (64 kg/m^3), to the full depth of the Supporting Construction (Item 1) and the Metallic Sleeve (Item 3A).

C. **CERTIFIED MANUFACTURER:** International Fireproof Technology

CERTIFIED PRODUCT: Firestop Putty

CERTIFIED MODEL: IFTI FM011 Moldable Firestop Putty

Ensure application area is clean and free of oil, loose dirt, rust, or scale. See Table 1 for required width and depth of moldable putty. Apply the appropriate amount of IFTI FM011 Moldable Firestop Putty around the interface of the Penetrating Item (Item 2) and the Supporting Construction (Item 1), in the remaining annular space on both sides of the Supporting Construction (Item 1). Smooth the surface of the firestop putty by hand to ensure complete contact with the Supporting Construction (Item 1) and the Penetrating Item (Item 2) and an airtight seal.

IFT/PF 120-13

Total Quality. Assured.

Division 07 – Thermal and Moisture Protection
07 84 00 Firestopping
07 84 13 Penetration Firestopping

International Fireproof Technology
Design No. IFT/PF 120-13
Through Penetration Firestop System
IFTI INSS1440 Fire Barrier Caulk
ASTM E814-13a (2017) and CAN/ULC-S115-11 at 2.5 Pa
Rating: See Table 1

Penetrating Item Material	Max. Duct Size W x H. (in.)	Max Size of Opening W x H (in. [mm])	Annular Space (in. [mm])		INSS1440 Depth (in. [mm])	Rating (min)					
						ASTM E814		CAN/ULC S115			
			Min.	Max.		T	F	F	FT	FH	FTH
Min. 18 GA Galvanized Steel, Insulated Duct	28 x 10 (711 x 254)	32 x 14 (813 x 356)	0 (0)	2 (51)	1/8 (3)	120	120	120	120	120	120

Table 1. Through Penetration Firestop System Installation Details and Ratings

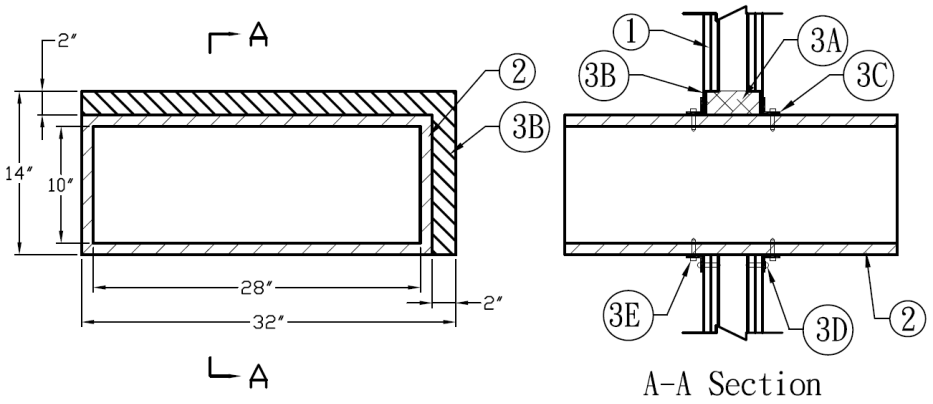

Figure 1. Through Penetration Firestop System

1. **SUPPORTING CONSTRUCTION:** Refer to Figure 1. Opening size shall be 4 in. larger in each direction than the uninsulated size of the penetrating duct. Create a rectangular, framed or solid-sided through-opening in a symmetrical, Code-conforming, 2 hour fire-rated wall assembly consisting of the min. construction features of one of the following options:

A. GYPSUM WALLBOARD CONSTRUCTION –

i. Framing: Nominal 2x4 wood studs or min. 25 GA, min. 3-1/2 in. wide, steel channel studs, spaced max. 24 in. on center (oc).

ii. Gypsum Board: 5/8 in. thick Type X, two layers per side.

IFT/PF 120-13 (2 of 2)

Division 07 – Thermal and Moisture Protection
07 84 00 Firestopping
07 84 13 Penetration Firestopping

B. CONCRETE CONSTRUCTION – Min. 6 in. (152mm) thickness, lightweight or normal weight reinforced concrete having a nominal density of 100-150 pcf.

C. CONCRETE MASONRY UNIT (CMU) CONSTRUCTION – Nominal 8 in. (203mm) thick concrete blocks (filled or unfilled).

Verify compliance of the supporting construction with its corresponding listed design.

2. PENETRATING ITEM: Refer to Figure 1 and Table 1. Position a max. 28 in. x 10 in., 18 GA galvanized steel (min.) duct, insulated with two layers of IFTI FB01-15 Fireproof Blanket, in the opening made in the Supporting Construction (Item 1). Establish an annular space, per Table 1, between the Penetrating Item and the Supporting Construction (Item 1).

3. FILL, VOID, OR CAVITY MATERIAL: Refer to Figure 1 and Table 1. Apply the following materials as indicated below:

A. Completely fill the annular space around the Penetrating Item (Item 2) and the Supporting Construction (Item 1) with tightly packed mineral wool with a min. density of 4 pcf (64 kg/m^3).

B. **CERTIFIED MANUFACTURER:** International Fireproof Technology

CERTIFIED PRODUCT: Firestop Sealant

CERTIFIED MODEL: IFTI INSS1440 Fire Barrier Caulk

Apply a 1/8 in. (3mm) depth of IFTI INSS1440 Fire Barrier Caulk around the interface of the Penetrating Item (Item 2) and the Supporting Construction (Item 1), on the surface of the mineral wool packing (Item 3A). Tool the surface of the firestop sealant to a smooth finish.

C. REINFORCEMENT ANGLES – On both sides of the Supporting Construction (Item 1), install min. 1-1/4 in. x 1-1/4 in. (32mm x 32mm), 12 GA steel angle tightly around the perimeter of the Penetrating Item (Item 2) and in contact with the Supporting Construction (Item 1) Surface.

D. Affix the Reinforcement Angle (Item 3C) to the Supporting Construction using #10 x 3-1/2 in. (89mm) wood screws spaced 6 in. (152mm) oc around the perimeter.

E. Affix the Reinforcement Angle (Item 3C) to the Penetrating Item (Item 2) using #12 x 2 in. (51mm) self-tapping screws spaced 6 in. (152mm) oc around the perimeter.

IFT/PF 120-14

Total Quality. Assured.

Division 07 – Thermal and Moisture Protection
07 84 00 Firestopping
07 84 13 Penetration Firestopping

International Firestop Technology
Design No. IFT/PF 120-14
Through Penetration Firestop System
IFTI INFS0812 Intumescent Strip, IFTI INSS1440 Fire Barrier Caulk
ASTM E814-13a (2017) and CAN/ULC-S115-11 at 2.5 Pa
Ratings: See Table 1

Penetrating Item Material (Sch 40)	Nom. Pipe Dia. (in.)	Dia. of Opening in. (mm)	Annular Space in. (mm)		INFS0812 Thick x Height (mm)	INSS1440 Depth in. (mm)	Rating (min)					
							ASTM E814		CAN/ULC S115			
			Min.	Max.			T	F	F	FT	FH	FTH
PVC w/ CATV Cables	2	3 (76)	5/16 (8)	5/16 (8)	1 @ 5 x 60	1/8 (3)	120	120	120	120	120	120

Table 1. Through Penetration Firestop System Installation Details and Ratings

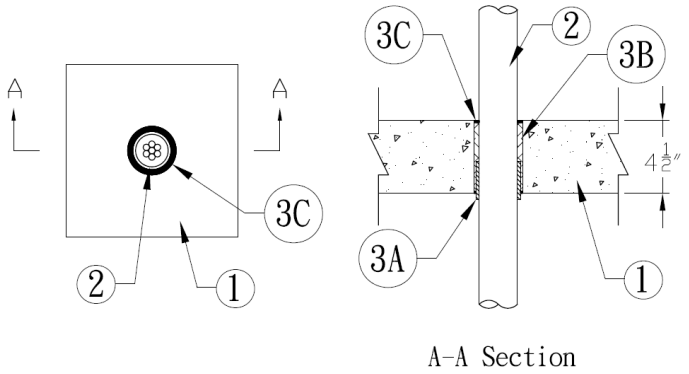

Figure 1. Through Penetration Firestop System

1. **SUPPORTING CONSTRUCTION:** Refer to Figure 1. Create a 3 in. diameter, round through-opening in a Code-conforming, 2 hour fire-resistance rated floor or wall assembly consisting of the following min. construction features:

   CONCRETE CONSTRUCTION: Min. 4-1/2 in. (114mm) thickness, normal weight reinforced concrete having a nominal density of 150 pcf.

   Verify compliance of the supporting construction with its corresponding listed design.

2. **PENETRATING ITEM:** Refer to Figure 1 and Table 1. Position a nominal 2 in. diameter Schedule 40 PVC pipe centered in the opening made in the Supporting Construction (Item 1). Establish an annular space between the PVC pipe and the Supporting Construction (Item 1). The nominal 2 in. diameter PVC pipe contains a 40% fill of 15 PVC jacketed CATV coaxial cables.

IFT/PF 120-14 (2 of 2)

Division 07 – Thermal and Moisture Protection
07 84 00 Firestopping
07 84 13 Penetration Firestopping

3. FILL, VOID, OR CAVITY MATERIAL: Refer to Figure 1 and Table 1. Apply the following materials as indicated below:

A. **CERTIFIED MANUFACTURER:** International Fireproof Technology

CERTIFIED PRODUCT: Intumescent Strip

CERTIFIED MODEL: IFTI INFS0812

Floor Applications:
Apply one individual layer of nominal 3/16 in. (5mm) thick IFTI INFS0812 Intumescent Strip, tightly wrapped around the Penetrating Item (Item 2) on the underside of the Supporting Construction (Item 1). Secure the IFTI INFS0812 Intumescent Strip with aluminum foil tape, and place in the annular space such that it extends 3/8 in. (10mm) below the underside surface of the Supporting Construction (Item 1). See Table 1 for required height of intumescent strip.

Wall Applications (Not Shown):
Apply one individual layer of nominal 3/16 in. (5mm) thick IFTI INFS0812 Intumescent Strip, tightly wrapped around the Penetrating Item (Item 2) on each side of the Supporting Construction (Item 1). Secure the IFTI INFS0812 Intumescent Strip with aluminum foil tape, and place in the annular space such that it extends 3/8 in. (10mm) beyond the outer surface of the Supporting Construction (Item 1) on both sides. See Table 1 for required height of intumescent strip.

B. Completely fill the annular space around the Penetrating Item (Item 2) and the Supporting Construction (Item 1), from the top of the Intumescent Strip (Item 3A) to the top surface of the Supporting Construction (Item 1), with tightly packed mineral wool with a min. density of 4 pcf (64 kg/m^3), to the full depth of the Supporting Construction (Item 1).

C. **CERTIFIED MANUFACTURER:** International Fireproof Technology

CERTIFIED PRODUCT: Firestop Sealant

CERTIFIED MODEL: IFTI INSS1440 Fire Barrier Caulk

Floor Applications:
Apply a 1/8 in. (3mm) thickness of IFTI INSS1440 Fire Barrier Caulk around the interface of the PVC Pipe (Item 2) and on the surface of the mineral wool packing (Item 3B). Tool the surface of the firestop sealant to a smooth finish.

Wall Applications (Not Shown):
Apply a 1/8 in. (3mm) depth of IFTI INSS1440 Fire Barrier Caulk around the interface of the Intumescent Strip (Item 3A) and on the surface of the mineral wool packing (Item 3B) on both sides of the Supporting Construction (Item 1). Tool the surface of the firestop sealant to a smooth finish.

IFT/PF 120-15

intertek
Total Quality. Assured.

Division 07 – Thermal and Moisture Protection
07 84 00 Firestopping
07 84 13 Penetration Firestopping

International Fireproof Technology
Design No. IFT/PF 120-15
Through Penetration Firestop System
IFTI INFS0812 Intumescent Strip, IFTI INSS1440 Fire Barrier Caulk
ASTM E814-13a (2017) and CAN/ULC-S115-11 at 2.5 Pa
Ratings: See Table 1

Penetrating Item Material (Sch 40)	Nom. Pipe Dia. (in.)	Dia. of Opening in. (mm)	Annular Space in. (mm)		INFS0812 Thick x Height (mm)	INSS1440 Depth in. (mm)	Rating (min)					
							ASTM E814		CAN/ULC S115			
			Min.	Max.			T	F	F	FT	FH	FTH
PVC	3	5 (127)	3/4 (19)	3/4 (19)	1 @ 5 x 60	1/8 (3)	120	120	120	120	120	120

Table 1. Through Penetration Firestop System Installation Details and Ratings

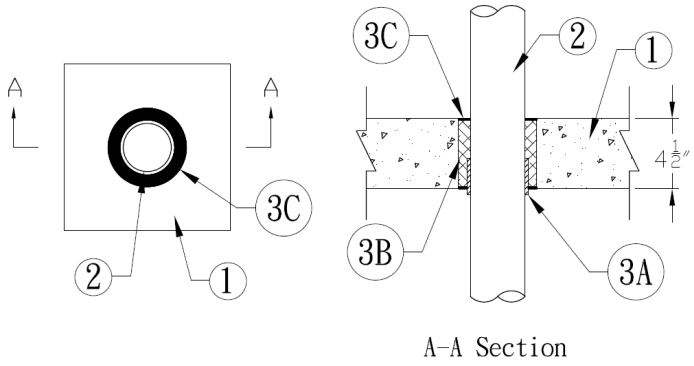

Figure 1. Through Penetration Firestop System

1. **SUPPORTING CONSTRUCTION:** Refer to Figure 1. Create a 5 in. diameter, round through-opening in a Code-conforming, 2 hour fire-resistance rated floor or wall assembly consisting of the following min. construction features:

   CONCRETE CONSTRUCTION: Min. 4-1/2 in. (114mm) thickness, normal weight reinforced concrete having a nominal density of 150 pcf.

   Verify compliance of the supporting construction with its corresponding listed design.

2. **PENETRATING ITEM:** Refer to Figure 1 and Table 1. Position a nominal 3 in. diameter Schedule 40 PVC pipe centered in the opening made in the Supporting Construction (Item 1). Establish an annular space between the Penetrating Item and the Supporting Construction (Item 1).

IFT/PF 120-15 (2 of 2)

Division 07 – Thermal and Moisture Protection
07 84 00 Firestopping
07 84 13 Penetration Firestopping

3. FILL, VOID, OR CAVITY MATERIAL: Refer to Figure 1 and Table 1. Apply the following materials as indicated below:

A. **CERTIFIED MANUFACTURER:** International Fireproof Technology

CERTIFIED PRODUCT: Intumescent Strip

CERTIFIED MODEL: IFTI INFS0812

Floor Applications:
Apply one individual layer of nominal 3/16 in. (5mm) thick IFTI INFS0812 Intumescent Strip, tightly wrapped around the Penetrating Item (Item 2) on the underside of the Supporting Construction (Item 1). Secure the IFTI INFS0812 Intumescent Strip with aluminum foil tape, and place in the annular space such that it extends 3/8 in. (10mm) below the underside surface of the Supporting Construction (Item 1). See Table 1 for required width of intumescent strip.

Wall Applications (Not Shown):
Apply one individual layer of nominal 3/16 in. (5mm) thick IFTI INFS0812 Intumescent Strip, tightly wrapped around the Penetrating Item (Item 2) on both sides of the Supporting Construction (Item 1). Secure the IFTI INFS0812 Intumescent Strip with aluminum foil tape, and place in the annular space such that it extends 3/8 in. (10mm) beyond the outer surface of the Supporting Construction (Item 1) on both sides. See Table 1 for required height of intumescent strip.

B. Completely fill the annular space around the Penetrating Item (Item 2) and the Supporting Construction (Item 1) with tightly packed mineral wool with a min. density of 4 pcf (64 kg/m^3), to the full depth of the Supporting Construction (Item 1).

C. **CERTIFIED MANUFACTURER:** International Fireproof Technology

CERTIFIED PRODUCT: Firestop Sealant

CERTIFIED MODEL: IFTI INSS1440 Fire Barrier Caulk

Floor Applications:
Apply a 1/8 in. (3mm) thickness of IFTI INSS1440 Fire Barrier Caulk around the interface of the PVC Pipe (Item 2) and on the surface of the mineral wool packing (Item 3B). Tool the surface of the firestop sealant to a smooth finish.

Wall Applications (Not Shown):
Apply a 1/8 in. (3mm) depth of IFTI INSS1440 Fire Barrier Caulk around the interface of the Intumescent Strip (Item 3A) and on the surface of the mineral wool packing (Item 3B) on both sides of the Supporting Construction (Item 1). Tool the surface of the firestop sealant to a smooth finish.

IFT/PF 120-16

Total Quality. Assured.

Division 07 – Thermal and Moisture Protection
07 84 00 Firestopping
07 84 13 Penetration Firestopping

International Fireproof Technology
Design No. IFT/PF 120-16
Through Penetration Firestop System
IFTI INFS0812 Intumescent Strip and IFTI INSS1440 Fire Barrier Caulk
ASTM E814-13a (2017) and CAN/ULC-S115-11 at 50Pa
Rating: See Table 1

Penetrating Item Material (Sch 40)	Nom. Pipe Dia. (in.)	Dia. of Opening (in. [mm])	Annular Space (in. [mm])		INFS0812 Thick x Height (mm)	INSS1440 Depth (in. [mm])	Rating (min)					
							ASTM E814		CAN/ULC S115			
			Min.	Max.			T	F	F	FT	FH	FTH
PEX	4	5 -1/2 (140)	3/8 (10)	5/8 (16)	2 @ 5 x 60	1/8 (3)	0	0	120	118	0	0
AquaRise®	4	5 -1/2 (140)	3/8 (10)	5/8 (16)	2 @ 5 x 60	1/8 (3)	120	120	120	120	120	120
FRPP	4	5 -1/2 (140)	3/8 (10)	5/8 (16)	2 @ 5 x 60	1/8 (3)	120	120	120	120	120	120
CPVC	4	5 -1/2 (140)	3/8 (10)	5/8 (16)	2 @ 5 x 60	1/8 (3)	120	120	120	120	120	120
PVC	4	5 -1/2 (140)	3/8 (10)	5/8 (16)	2 @ 5 x 60	1/8 (3)	120	120	120	120	120	120

Table 1. Through Penetration Firestop System Installation Details and Ratings

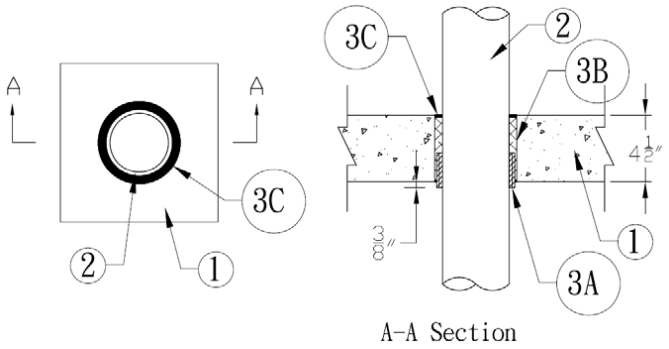

Figure 1. Through Penetration Firestop System

1. **SUPPORTING CONSTRUCTION:** Refer to Figure 1. Create a 5-1/2 in. diameter, round through-opening in a Code-conforming, 2 hour fire-rated floor or wall assembly consisting of the following min. construction features:

   CONCRETE CONSTRUCTION: Min. 4-1/2 in. (114mm) thickness, normal weight reinforced concrete having a nominal density of 150 pcf.

   Verify compliance of the supporting construction with its corresponding listed design.

2. **PENETRATING ITEM:** Refer to Figure 1 and Table 1. Position a nominal 4 in. diameter Schedule 40 plastic pipe in the opening made in the Supporting Construction (Item 1). Use any of the following pipe types: PEX, AquaRise®,

IFT/PF 120-16 (2 of 2)

FRPP, PVC, or CPVC. Establish an annular space, per Table 1, between the Penetrating Item and the Supporting Construction (Item 1).

3. **FILL, VOID, OR CAVITY MATERIAL:** Refer to Figure 1 and Table 1. Apply the following materials as indicated below:

   A. **CERTIFIED MANUFACTURER:** International Fireproof Technology

   CERTIFIED PRODUCT: Intumescent Strip

   CERTIFIED MODEL: IFTI INFS0812

   Floor Applications:
   Apply two individual layers of nominal 5mm thick IFTI INFS0812 Intumescent Strip, each tightly wrapped around the Penetrating Item (Item 2) on the underside of the Supporting Construction (Item 1). Secure the IFTI INFS0812 Intumescent Strips with aluminum foil tape, and place them in the annular space such that they extend 3/8 in. (10mm) below the underside surface of the Supporting Construction (Item 1). See Table 1 for required height of intumescent strip.

   Wall Applications (Not Shown):
   Apply two individual layers of nominal 5mm thick IFTI INFS0812 Intumescent Strip, each tightly wrapped around the Penetrating Item (Item 2) on both sides of the Supporting Construction (Item 1). Secure the IFTI INFS0812 Intumescent Strips with aluminum foil tape, and place them in the annular space such that they extend 3/8 in. (10mm) beyond the outer surface of the Supporting Construction (Item 1) on both sides. See Table 1 for required height of intumescent strip.

   B. Completely fill the annular space around the Penetrating Item (Item 2) and the Supporting Construction (Item 1) with tightly packed mineral wool with a min. density of 4 pcf (64 kg/m^3), to the full depth of the Supporting Construction (Item 1).

   C. **CERTIFIED MANUFACTURER:** International Fireproof Technology

   CERTIFIED PRODUCT: Firestop Sealant

   CERTIFIED MODEL: IFTI INSS1440 Fire Barrier Caulk

   Floor Applications:
   Apply a 1/8 in. (3mm) depth of IFTI INSS1440 Fire Barrier Caulk around the interface of the Penetrating Item (Item 2) and on the surface of the mineral wool packing (Item 3B). Tool the surface of the firestop sealant to a smooth finish.

   Wall Applications (Not Shown):
   Apply a 1/8 in. (3mm) depth of IFTI INSS1440 Fire Barrier Caulk around the interface of the Intumescent Strip (Item 3A) and on the surface of the mineral wool packing (Item 3B) on both sides of the Supporting Construction (Item 1). Tool the surface of the firestop sealant to a smooth finish.

IFT/PF 120-17

Total Quality. Assured.

Division 07 – Thermal and Moisture Protection
07 84 00 Firestopping
07 84 13 Penetration Firestopping

International Fireproof Technology
Design No. IFT/PF 120-17
Through Penetration Firestop System
IFTI SSCI Firestop Collar, IFTI INFS0812 Intumescent Strip,
IFTI INSS1440 Fire Barrier Caulk, IFTI FP-04+ Firestop Sheet
ASTM E814-13a (2017) and CAN/ULC-S115-11 at 50 Pa
Ratings: See Table 1

Penetrating Item Material (Sch 40)	Nom. Pipe Dia. (in.)	Dia. of Opening in. (mm)	Annular Space in. (mm)		SSCI-X Collar Height (mm)	INFS0812 Thick x Height (mm)	INSS1440 Depth in. (mm)	Rating (min)					
								ASTM E814		CAN/ULC S115			
			Min.	Max.				T	F	F	FT	FH	FTH
PVC	6	7 (178)	1 /4 (6)	1 /4 (6)	80	3 @ 5 x 80	1/8 (3)	120	120	120	120	120	120
CPVC	6	7 (178)	1 /4 (6)	1 /4 (6)	80	3 @ 5 x 80	1/8 (3)	120	120	120	120	120	120

Table 1. Through Penetration Firestop System Installation Details and Ratings

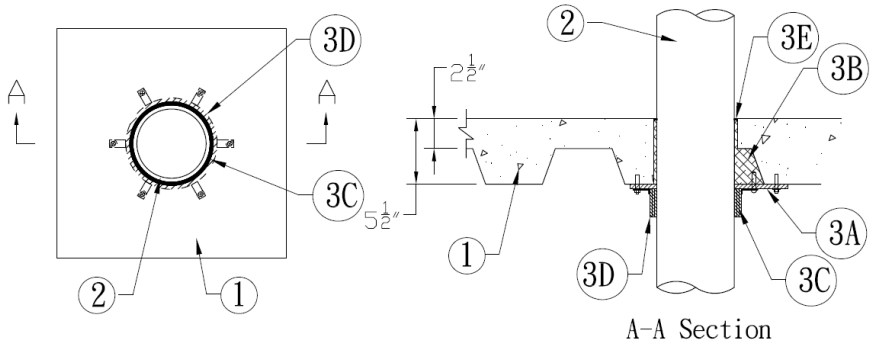

Figure 1. Through Penetration Firestop System

1. **SUPPORTING CONSTRUCTION:** Refer to Figure 1. Create a 7 in. diameter, round through-opening in a Code-conforming, 2 hour fire-resistance rated floor assembly consisting of the following min. construction features:

   CONCRETE CONSTRUCTION: Min. 5-1/2 in. (140mm) thickness, lightweight reinforced concrete having a nominal density of 100 pcf covering metal decking with a min. of 2-1/2 in. (64mm) clear cover and 3 in. (76mm) deep valleys.

   Verify compliance of the supporting construction with its corresponding listed design.

2. **PENETRATING ITEM:** Refer to Figure 1 and Table 1. Position a nominal 6 in. diameter Schedule 40 plastic pipe centered in the opening made in the Supporting Construction (Item 1). Use PVC or CPVC pipe. Establish a 1/4 in. (6mm) annular space between the Penetrating Item and the Supporting Construction (Item 1).

IFT/PF 120-17 (2 of 3)

Division 07 – Thermal and Moisture Protection
07 84 00 Firestopping
07 84 13 Penetration Firestopping

3. FILL, VOID, OR CAVITY MATERIAL: Refer to Figure 1 and Table 1. Apply the following materials as indicated below:

A. **CERTIFIED MANUFACTURER:** International Fireproof Technology

CERTIFIED PRODUCT: Intumescent Sheet

CERTIFIED MODEL: IFTI FP-04+ Firestop Sheet

Cut a square section of IFTI FP-04+ Firestop Sheet such that the intumescent sheet spans the opening between adjacent deck valleys on either side of the Penetrating Item (Item 2) and overlaps a min. of 2 in. (50mm) onto the undersurface of the metal deck at each valley. Create a 6-1/2 in. diameter, round through-opening in the intumescent sheet at the appropriate location and slit the sheet perpendicular to the closed valley on the underside of the Supporting Construction (Item 1). Secure the intumescent sheet to the underside of the Supporting Construction (Item 1) using 1/4 in. (6mm) x 2 in. (51mm) concrete anchors spaced 6 in. (152mm) on center (oc) around perimeter of intumescent sheet, spaced 1 in. (25mm) in from the edge of the intumescent sheet.

B. Completely fill the annular space around the Penetrating Item (Item 2) and the Supporting Construction (Item 1) with tightly packed mineral wool with a min. density of 4 pcf (64 kg/m^3). Completely fill the void between the underside of the Supporting Construction (Item 1) and the top surface of the Intumescent Sheet (Item 3A) with tightly packed mineral wool with a min. density of 4 pcf (64 kg/m^3).

C. **CERTIFIED MANUFACTURER:** International Fireproof Technology

CERTIFIED PRODUCT: Intumescent Strip

CERTIFIED MODEL: IFTI INFS0812

Apply three individual layers of nominal 3/16 in. (5mm) thick IFTI INFS0812 Intumescent Strips, each tightly wrapped around the Penetrating Item (Item 2) on the underside of the Intumescent Sheet (Item 3A). Secure the IFTI INFS0812 Intumescent Strips with aluminum foil tape, and butt them against the Intumescent Sheet (Item 3A). See Table 1 for required height of intumescent strip. The IFTI INFS0812 Intumescent Strip can be either bulk packaged and cut to fit or part of an SSCI Firestop Collar kit with all components required for installation, packaged together.

D. **CERTIFIED MANUFACTURER:** International Fireproof Technology

CERTIFIED PRODUCT: Firestop Collar

CERTIFIED MODEL: IFTI SSCI Firestop Collar

Install a 6 in. IFTI SSCI-X Firestop Collar over the three layers of IFTI INFS0812 Intumescent Strip (Item 3C) on the underside side of the Intumescent Sheet (Item 3A) using the supplied clamp. Secure each using six #8 x 1 in. (25mm) self-tapping screws. See Table 1 for required collar height. The IFTI SSCI Firestop Collar can be either bulk packaged and cut to fit or part of a SSCI Firestop Collar kit with all components required for installation, packaged together.

IFT/PF 120-17 (3 of 3)

Division 07 – Thermal and Moisture Protection
07 84 00 Firestopping
07 84 13 Penetration Firestopping

E. **CERTIFIED MANUFACTURER:** International Fireproof Technology

CERTIFIED PRODUCT: Firestop Sealant

CERTIFIED MODEL: IFTI INSS1440 Fire Barrier Caulk

Apply a 1/8 in. (3mm) thickness of IFTI INSS1440 Fire Barrier Caulk around the interface of the Penetrating Item (Item 2) and the surface of the mineral wool packing (Item 3B). Tool the surface of the firestop sealant to a smooth finish.

IFT/PF 120-18

Total Quality. Assured.

Division 07 – Thermal and Moisture Protection
07 84 00 Firestopping
07 84 13 Penetration Firestopping

International Fireproof Technology
Design No. IFT/PF 120-18
Through Penetration Firestop System
IFTI SSCI Firestop Collar, IFTI INFS0812 Intumescent Strip,
IFTI INSS1440 Fire Barrier Caulk, IFTI FP-04+ Firestop Sheet
ASTM E814-13a (2017) and CAN/ULC-S115-11 at 50 Pa
Ratings: See Table 1

Penetrating Item Material (Sch 40)	Nom. Pipe Dia. (in.)	Dia. of Opening in. (mm)	Annular Space in. (mm)		SSCI-X Collar Height (mm)	INFS0812 Thick x Height (mm)	INSS1440 Depth in. (mm)	Rating (min)					
								ASTM E814		CAN/ULC S115			
			Min.	Max.				T	F	F	FT	FH	FTH
XFR	4	5 (127)	1/4 (6)	1/4 (6)	60	2 @ 5 x 60	1/8 (3)	120	120	120	120	120	120
PPR	4	5 (127)	1/4 (6)	1/4 (6)	60	2 @ 5 x 60	1/8 (3)	120	120	120	120	120	120
ABS	4	5 (127)	1/4 (6)	1/4 (6)	60	2 @ 5 x 60	1/8 (3)	120	120	120	120	120	120
PVC	4	5 (127)	1/4 (6)	1/4 (6)	60	2 @ 5 x 60	1/8 (3)	120	120	120	120	120	120

Table 1. Through Penetration Firestop System Installation Details and Ratings

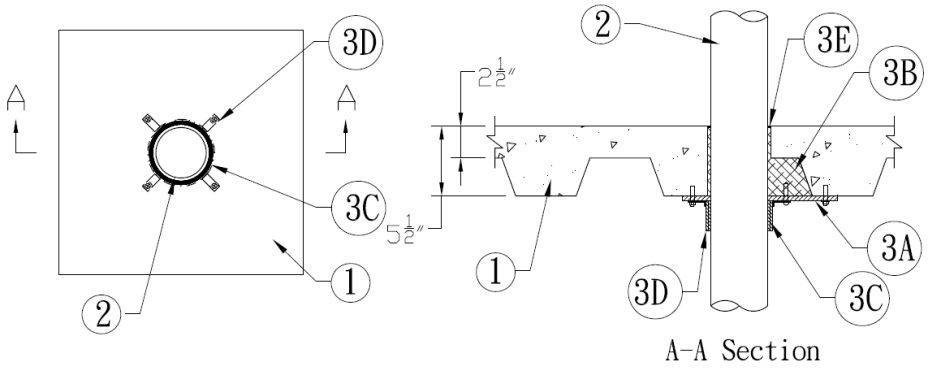

Figure 1. Through Penetration Firestop System

1. **SUPPORTING CONSTRUCTION:** Refer to Figure 1. Create a 5 in. diameter, round through-opening in a Code-conforming, 2 hour fire-resistance rated floor assembly consisting of the following min. construction features:

CONCRETE CONSTRUCTION: Min. 5-1/2 in. (140mm) thickness, lightweight reinforced concrete having a nominal density of 100 pcf covering metal decking with a min. of 2-1/2 in. (64mm) clear cover and 3 in. (76mm) deep valleys.

IFT/PF 120-18 (2 of 3)

Verify compliance of the supporting construction with its corresponding listed design.

2. **PENETRATING ITEM:** Refer to Figure 1 and Table 1. Position a nominal 4 in. diameter Schedule 40 plastic pipe centered in the opening made in the Supporting Construction (Item 1). Use XFR, ABS, PPR, or PVC pipe. Establish an annular space between the Penetrating Item and the Supporting Construction (Item 1).

3. **FILL, VOID, OR CAVITY MATERIAL:** Refer to Figure 1 and Table 1. Apply the following materials as indicated below:

   A. **CERTIFIED MANUFACTURER:** International Fireproof Technology

   CERTIFIED PRODUCT: Intumescent Sheet

   CERTIFIED MODEL: IFTI FP-04+ Firestop Sheet

   Cut a square section of IFTI FP-04+ Firestop Sheet such that the intumescent sheet spans the opening between adjacent deck valleys on either side of the Penetrating Item (Item 2) and overlaps a min. of 2 in. (50mm) onto the undersurface of the metal deck at each valley. Create a 4-1/2 in. diameter, round through-opening in the intumescent sheet at the appropriate location and slit the sheet perpendicular to the closed valley on the underside of the Supporting Construction (Item 1). Secure the intumescent sheet to the underside of the Supporting Construction (Item 1) using 1/4 in. (6mm) x 2 in. (51mm) concrete anchors spaced 6 in. (152mm) on center (oc) around perimeter of intumescent sheet, spaced 1 in. (25mm) in from the edge of the intumescent sheet.

   B. Completely fill the annular space around the Penetrating Item (Item 2) and the Supporting Construction (Item 1) with tightly packed mineral wool with a min. density of 4 pcf (64 kg/m^3). Completely fill the void between the underside of the Supporting Construction (Item 1) and the top surface of the Intumescent Sheet (Item 3A) with tightly packed mineral wool with a min. density of 4 pcf (64 kg/m^3).

   C. **CERTIFIED MANUFACTURER:** International Fireproof Technology

   CERTIFIED PRODUCT: Intumescent Strip

   CERTIFIED MODEL: IFTI INFS0812

   Apply two individual layers of nominal 3/16 in. (5mm) thick IFTI INFS0812 Intumescent Strips, each tightly wrapped around the Penetrating Item (Item 2) on the underside of the Intumescent Sheet (Item 3A). Secure the IFTI INFS0812 Intumescent Strips with aluminum foil tape, and butt them against the Intumescent Sheet (Item 3A). See Table 1 for required height of intumescent strip. The IFTI INFS0812 Intumescent Strip can be either bulk packaged and cut to fit or part of an SSCI Firestop Collar kit with all components required for installation, packaged together.

   D. **CERTIFIED MANUFACTURER:** International Fireproof Technology

   CERTIFIED PRODUCT: Firestop Collar

   CERTIFIED MODEL: IFTI SSCI Firestop Collar

IFT/PF 120-18 (3 of 3)

Division 07 – Thermal and Moisture Protection
07 84 00 Firestopping
07 84 13 Penetration Firestopping

Install a 4 in. IFTI SSCI-X Firestop Collar over the two layers of IFTI INFS0812 Intumescent Strip (Item 3C) on the underside side of the Intumescent Sheet (Item 3A) using the supplied clamp. Secure each using four #8 x 1 in. (25mm) self-tapping screws. See Table 1 for required collar height. The IFTI SSCI Firestop Collar can be either bulk packaged and cut to fit or part of an SSCI Firestop Collar kit with all components required for installation, packaged together.

E. **CERTIFIED MANUFACTURER:** International Fireproof Technology

CERTIFIED PRODUCT: Firestop Sealant

CERTIFIED MODEL: IFTI INSS1440 Fire Barrier Caulk

Apply a 1/8 in. (3mm) thickness of IFTI INSS1440 Fire Barrier Caulk around the interface of the Penetrating Item (Item 2) and the surface of the mineral wool packing (Item 3B). Tool the surface of the firestop sealant to a smooth finish.

IFT/PF 120-19

intertek
Total Quality. Assured.

Division 07 – Thermal and Moisture Protection
07 84 00 Firestopping
07 84 13 Penetration Firestopping

International Fireproof Technology
Design No. IFT/PF 120-19
Through Penetration Firestop System
IFTI SSCI Firestop Collar, IFTI INFS0812 Intumescent Strip,
IFTI INSS1440 Fire Barrier Caulk, IFTI FP-04+ Intumescent Sheet
ASTM E814-13a (2017) and CAN/ULC-S115-11 at 2.5 Pa
Ratings: See Table 1

Penetrating Item Material (Sch 40)	Max. Nom. Pipe Dia. (in.)	Size Of Opening in. (mm)	Annular Space To Edges in. (mm)		SSCI-X Collar Height (mm)	INFS0812 Thick x Height (mm)	INSS1440 Depth in. (mm)	Rating (min)					
								ASTM E814		CAN/ULC S115			
			Min.	Max.				T	F	F	FT	FH	FTH
PVC	4	12 x 12 (305x305)	7/16 (11)	1-1/4 (32)	60	2@ 5 x 60	1/8 (3)	120	120	120	120	120	120
PVC	3		9/16 (14)	1-1/4 (32)	60	2@ 5 x 60	1/8 (3)	120	120	120	120	120	120
3 x Steel	3 @ 1		1 (25.4)	1-3/4 (44.5)	60	2@ 5 x 60	1/8 (3)	120	120	120	120	120	120

Table 1. Through Penetration Firestop System Installation Details and Ratings

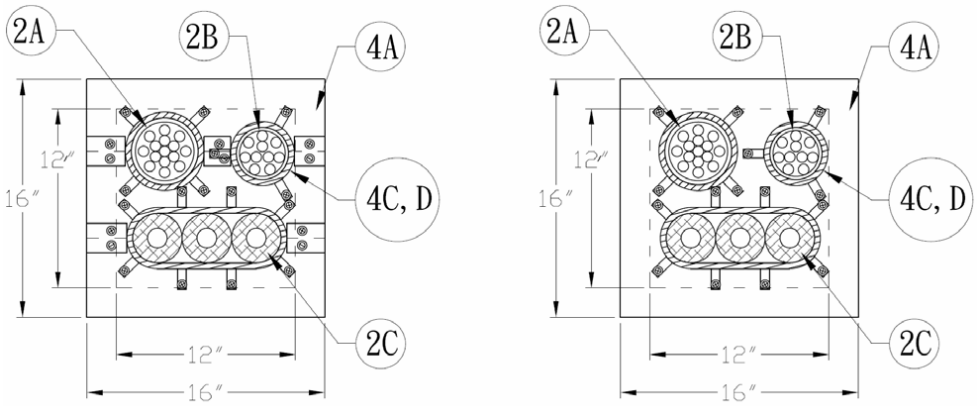

Figure 1. Through Penetration Firestop System

1. **SUPPORTING CONSTRUCTION:** Refer to Figure 1. Create a 12 in. (305mm) square, through-opening a Code-conforming, 2 hour fire-rated floor or wall assembly consisting of the following min. construction features:

CONCRETE CONSTRUCTION: Min. 4-1/2 in. (114mm) thickness, normal weight reinforced concrete having a nominal density of 150 pcf.

Verify compliance of the supporting construction with its corresponding listed design.

IFT/PF 120-19 (2 of 4)

2. PENETRATING ITEM: Refer to Figure 1 and Table 1.

A. Position a nominal 4 in. diameter Schedule 40 PVC plastic pipe in the opening made in the Supporting Construction (Item 1). Pipe is filled with 15 beverage pipes, each 3/8 in. (10mm) nominal diameter PE tubing, for a nominal 40% fill. Establish an annular space of 1-1/4 in. (max.) between the Penetrating Item and the edges of the opening in the Supporting Construction (Item 1).

B. Position a nominal 3 in. diameter Schedule 40 PVC plastic pipe in the opening made in the Supporting Construction (Item 1). Pipe is filled with 10 beverage pipes, each 3/8 in. (10mm) nominal diameter PE tubing, for a nominal 40% fill. Establish an annular space of 1-1/4 in. (max.) between the Penetrating Item and the edges of the opening in the Supporting Construction (Item 1).

C. Position a set of three nominal 1 in. diameter steel pipes in a horizontal row. Each pipe shall be insulated with 1 in. nominal thickness of fiberglass pipe insulation with foil scrim. The three pipes shall be arranged such that they are in contact with each adjacent pipe in a straight row. Establish an annular space of 1-3/4 in. (max.) between the Penetrating Item and the edges of the opening.

3. PACKING MATERIAL: Refer to Figure 1 and Table 1. Apply the following materials as indicated below:

Completely fill the annular space around the Penetrating Items (Item 2) and the Supporting Construction (Item 1) with tightly packed mineral wool with a min. density of 4 pcf (64 kg/m^3). Mineral wool is to be installed by stacking layers cut to the width of the wall or depth of the floor and compressed 50% during installation. The fibers are to be oriented such that the factory surfaces of the mineral wool material cut from batts is oriented parallel with the plane of the Supporting Construction (Item 1).

4. FILL, VOID, OR CAVITY MATERIAL: Refer to Figure 1 and Table 1. Apply the following materials as indicated below

A. **CERTIFIED MANUFACTURER:** International Fireproof Technology

CERTIFIED PRODUCT: Intumescent Sheet

CERTIFIED MODEL: IFTI FP-04+ Firestop Sheet

Cut a 16 in. (406mm) square section of IFTI FP-04+ Firestop Sheet and center it over the opening on both sides of the Supporting Construction (Item 1). Secure the intumescent sheet to both sides of the Supporting Construction (Item 1) using 1/4 in. x 2 in. (6mm x 51mm) concrete anchors (or similar fasteners appropriate to the Supporting Construction (Item 1)) around perimeter of intumescent sheet, spaced 1 in. (25mm) in from the edge of the intumescent sheet and max. 6 in. (152mm) oc along each side. Provide openings for each Penetrating Item (Item 2) in the intumescent sheet on each side for each of the three penetrating items. The intumescent sheet shall be cut along the nominal horizontal centerline of the Penetrating Items (Item 2) to allow for installation. Install a nominal 2 in. wide strip of intumescent sheet centered over

IFT/PF 120-19 (3 of 4)

each seam and secure each strip using #8 x 1 in. (25mm) self-tapping screws, nominally every 6 in. on each side of the seam. If installation conditions permit, the intumescent sheet may optionally be installed in a single sheet.

B. **CERTIFIED MANUFACTURER:** International Fireproof Technology

CERTIFIED PRODUCT: Firestop Sealant

CERTIFIED MODEL: IFTI INSS1440 Fire Barrier Caulk

(Not Shown) Apply a 1/8 in. (3mm) bead of IFTI INSS1440 Fire Barrier Caulk around the perimeter of each side of the opening created in the Supporting Construction (Item 1) prior to installation of the Intumescent Sheet (Item 4A).

(Not Shown) Apply a 1/8 in. (3mm) bead of IFTI INSS1440 Fire Barrier Caulk nominally 1/2 in. above and below the seams in the Intumescent Sheet (Item 4A) prior to installation of the intumescent sheet strips over the seams.

(Not Shown) Apply a 1/8 in. (3mm) bead of IFTI INSS1440 Fire Barrier Caulk around the interface of each of the Penetrating Items (Item 2) and the Intumescent Sheet (Item 4A). Tool the surface of the firestop sealant to a smooth finish.

C. **CERTIFIED MANUFACTURER:** International Fireproof Technology

CERTIFIED PRODUCT: Intumescent Strip

CERTIFIED MODEL: IFTI INFS0812

Refer to Figure 1 and Table 1.

Floor Applications:
Apply two individual layers of nominal 5mm thick IFTI INFS0812 Intumescent Strip, each tightly wrapped around Penetrating Item or set of Penetrating Items (Item 2) on the underside of the Intumescent Sheet (Item 4A). Secure the IFTI INFS0812 Intumescent Strips with aluminum foil tape, and butt them against the Intumescent Sheet (Item 4A). See Table 1 for required height of intumescent strip.

Wall Applications (Not Shown):
Apply two individual layers of nominal 5mm thick IFTI INFS0812 Intumescent Strip, each tightly wrapped around Penetrating Item or set of Penetrating Items (Item 2) on the surface of the Intumescent Sheet (Item 4A) on both sides of the Supporting Construction (Item 1). Secure the IFTI INFS0812 Intumescent Strips with aluminum foil tape, and butt them against the Intumescent Sheet (Item 4A). See Table 1 for required height of intumescent strip.

D. **CERTIFIED MANUFACTURER:** International Fireproof Technology

CERTIFIED PRODUCT: Firestop Collar

CERTIFIED MODEL: IFTI SSCI Firestop Collar

Refer to Figure 1 and Table 1.

Floor Applications:
Install a 4 in., 3 in., or cut-to-length IFTI SSCI-X Firestop Collar over the two layers of IFTI INFS0812 Intumescent Strip (Item 4C), as appropriate, on the underside of the Intumescent Sheet (Item 4A) using the supplied clamps. Secure each using three,

IFT/PF 120-19 (4 of 4)

four, or eight, #8 x 1 in. (25mm) self-tapping screws. See Table 1 for required collar height.

Wall Applications (Not Shown):
On both sides of the Supporting Construction (Item 1), install a 4 in., 3 in., or cut-to-length IFTI SSCI-X Firestop Collar over the two layers of IFTI INFS0812 Intumescent Strip (Item 4C), as appropriate, on the surface of the Intumescent Sheet (Item 4A) using the supplied clamps. Secure each using three, four, or eight, #8 x 1 in. (25mm) self-tapping screws. See Table 1 for required collar height.

IFT/PF 120-21

Total Quality. Assured.

Division 07 – Thermal and Moisture Protection
07 84 00 Firestopping
07 84 13 Penetration Firestopping

International Fireproof Technology
Design No. IFT/PF 120-21
Through Penetration Firestop System
IFTI INFS0812 Intumescent Strip, IFTI INSS1440 Fire Barrier Caulk
ASTM E814-13a (2017) and CAN/ULC-S115-11 at 2.5 Pa
Ratings: See Table 1

Penetrating Item Material	Nom. Pipe Dia. (in.)	Dia. of Opening in. (mm)	Annular Space in. (mm)		INFS0812 Thick x Width (mm)	INSS1440 Depth in. (mm)	Rating (min)					
							ASTM E814		CAN/ULC S115			
			Min.	Max.			T	F	F	FT	FH	FTH
Copper AC Line Set	3/4, 1/4	4 (102)	3/4 (19)	3/4 (19)	1 @ 5 x 60, Two locations	1/8 (3) Two locations	82	120	120	82	120	82

Table 1. Through Penetration Firestop System Installation Details and Ratings

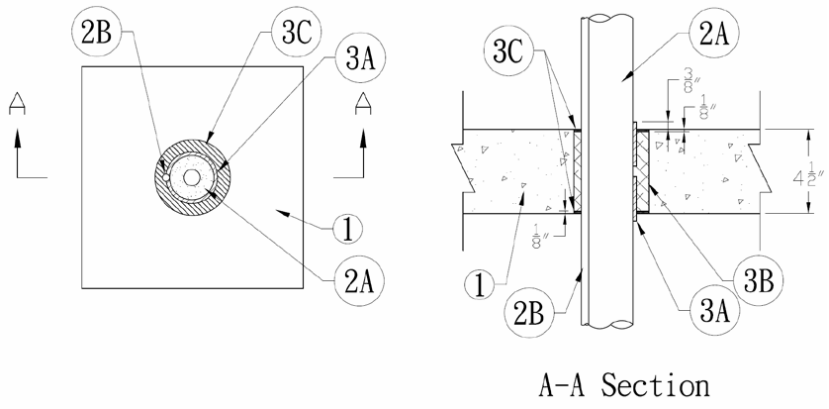

Figure 1. Through Penetration Firestop System

1. **SUPPORTING CONSTRUCTION:** Refer to Figure 1. Create a 4 in. diameter, round through-opening in a Code-conforming, 2 hour fire-resistance rated floor or wall assembly consisting of the following min. construction features:

   CONCRETE CONSTRUCTION: Min. 4-1/2 in. (114mm) thickness, normal weight reinforced concrete having a nominal density of 150 pcf.

   Verify compliance of the supporting construction with its corresponding listed design.

2. **PENETRATING ITEM:** Refer to Figure 1 and Table 1. Position an insulated copper line set centered in the opening made in the Supporting Construction (Item 1). The AC line set shall consist of a nominal 3/4 in. (19mm) copper tube insulated with 3/4 in. (19mm) thick foam rubber insulation and a non-insulated nominal 1/4 in. (6.5mm) copper tube.

IFT/PF 120-21 (2 of 2)

Establish an annular space between the Penetrating Item and the Supporting Construction (Item 1).

3. **FILL, VOID, OR CAVITY MATERIAL:** Refer to Figure 1 and Table 1. Apply the following materials as indicated below:

   A. **CERTIFIED MANUFACTURER:** International Fireproof Technology

   CERTIFIED PRODUCT: Intumescent Strip

   CERTIFIED MODEL: IFTI INFS0812

   Apply one individual layer of nominal 3/16 in. (5mm) thick IFTI INFS0812 Intumescent Strip, tightly wrapped around the insulated 3/4 in. (19mm) copper tube portion of the Penetrating Item (Item 2) on both the underside and the top surface of the Supporting Construction (Item 1). Secure the IFTI INFS0812 Intumescent Strips with aluminum foil tape, and place in the annular space such that it extends 3/8 in. (10mm) below the underside surface and above the top surface of the Supporting Construction (Item 1). The non-insulated 1/4 in. (6.5mm) copper tube portion of the Penetrating Item (Item 2) is positioned between the outer surface of the intumescent strip and the inside wall of the opening in the Supporting Construction (Item 1). See Table 1 for required width of intumescent strip.

   B. Completely fill the annular space around the Penetrating Item (Item 2) and the Supporting Construction (Item 1) with tightly packed mineral wool with a min. density of 4 pcf (64 kg/m^3), to the full depth of the Supporting Construction (Item 1).

   C. **CERTIFIED MANUFACTURER:** International Fireproof Technology

   CERTIFIED PRODUCT: Firestop Sealant

   CERTIFIED MODEL: IFTI INSS1440 Fire Barrier Caulk

   Apply a 1/8 in. (3mm) thickness of IFTI INSS1440 Fire Barrier Caulk around the interface of the Penetrating Item (Item 2) and the surface of the mineral wool packing (Item 3B) on both sides of the Supporting Construction (Item 1). Tool the surface of the firestop sealant to a smooth finish.

IFT/PF 120-22

intertek
Total Quality. Assured.

Division 07 – Thermal and Moisture Protection
07 84 00 Firestopping
07 84 13 Penetration Firestopping

International Fireproof Technology
Design No. IFT/PF 120-22
Through Penetration Firestop System
IFTI FP-04+ Firestop Sheet
ASTM E814-13a (2017) and CAN/ULC-S115-11 at 2.5 Pa
Ratings: See Table 1

Penetrating Item Material (Sch 40)	Nom. Pipe Dia. (in.)	Dia. of Opening in. (mm)	Annular Space in. (mm)		Rating (min)					
					ASTM E814		CAN/ULC S115			
			Min.	Max.	T	F	F	FT	FH	FTH
None	n/a	10 (254)	10 (254)	10 (254)	120	120	120	120	120	120

Table 1. Through Penetration Firestop System Installation Details and Ratings

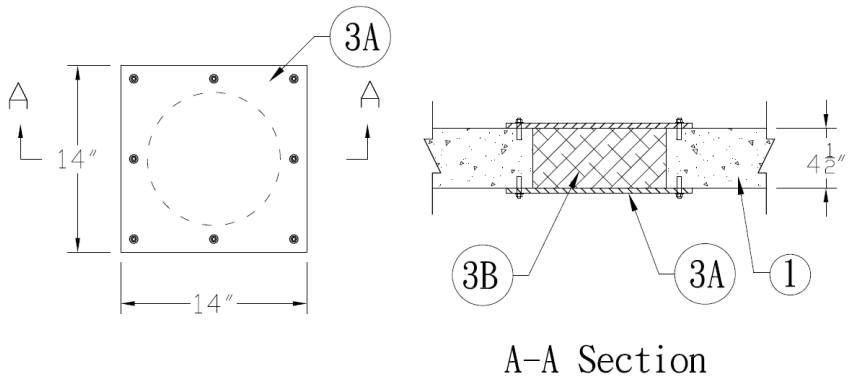

Figure 1. Through Penetration Firestop System

1. **SUPPORTING CONSTRUCTION:** Refer to Figure 1. Create a 10 in. diameter, round through-opening in a Code-conforming, 2 hour fire-resistance rated floor or wall assembly consisting of the following min. construction features:

   A. CONCRETE CONSTRUCTION – Min. 4-1/2 in. (114mm) thickness, normal weight reinforced concrete having a nominal density of 150 pcf.

   B. CONCRETE MASONRY UNIT (CMU) CONSTRUCTION – Nominal 8 in. (203mm) thick concrete blocks (filled or unfilled).

   Verify compliance of the supporting construction with its corresponding listed design.

2. **PENETRATING ITEM:** Refer to Figure 1 and Table 1. No penetrating item is present in this design.

IFT/PF 120-22 (2 of 2)

3. **FILL, VOID, OR CAVITY MATERIAL:** Refer to Figure 1 and Table 1. Apply the following materials as indicated below:

   A. **CERTIFIED MANUFACTURER:** International Fireproof Technology

      CERTIFIED PRODUCT: Intumescent Sheet

      CERTIFIED MODEL: IFTI FP-04+ Firestop Sheet

      Cut a 14 in. (356mm) square section of IFTI FP-04+ Firestop Sheet and center it over the opening on both sides of the Supporting Construction (Item 1). Secure the intumescent sheet to the Supporting Construction (Item 1) using 1/4 in. (6mm) x 2 in. (51mm) concrete anchors around perimeter of intumescent sheet, located 1 in. (25mm) in from the edge at each corner and in the center of each side.

   B. Completely fill the opening in the Supporting Construction (Item 1) with tightly packed mineral wool with a min. density of 4 pcf (64 kg/m^3).

IFT/PF 60-01

intertek
Total Quality. Assured.

Division 07 – Thermal and Moisture Protection
07 84 00 Firestopping
07 84 13 Penetration Firestopping

International Fireproof Technology
Design No. IFT/PF 60-01
Through Penetration Firestop System
IFTI INFS0812 Intumescent Strip and IFTI INSS1440 Fire Barrier Caulk
ASTM E814-13a (2017) and CAN/ULC-S115-11 at 2.5Pa
Rating: See Table 1

Penetrating Item Material (Sch 40 or thinner)	Max. Pipe Dia. (in.)	Max. Dia. of Opening (in. [mm])	Annular Space in. (mm)		Min. INFS0812 Thick x Height (mm)	INSS1440 Depth in. (mm)	Rating (min)					
							ASTM E814		CAN/ULC S115			
			Min.	Max.			T	F	F	FT	FH	FTH
PVC	4	5-1/2 (140)	3/8 (10)	5/8 (16)	2 @ 5 x 60	1/8 (3)	60	60	60	60	60	60
RNC	4	5-1/2 (140)	3/8 (10)	5/8 (16)	2 @ 5 x 60	1/8 (3)	60	60	60	60	60	60
ABS	4	5-1/2 (140)	3/8 (10)	5/8 (16)	2 @ 5 x 60	1/8 (3)	60	60	60	60	60	60

Table 1. Through Penetration Firestop System Installation Details and Ratings

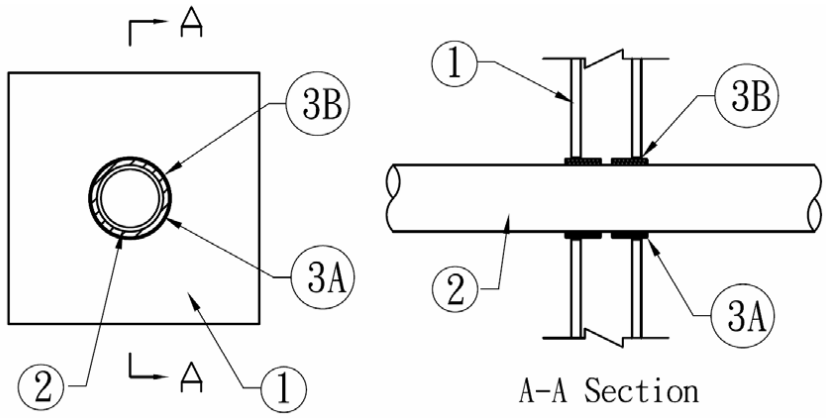

Figure 1. Through Penetration Firestop System

1. **SUPPORTING CONSTRUCTION:** Refer to Figure 1. Opening size shall be 1 in. larger than the OD of the penetrating pipe. Create a round through-opening in a symmetrical, Code-conforming, 1 hour fire-rated wall assembly consisting of the min. construction features of one of the following options:

A. GYPSUM WALLBOARD CONSTRUCTION –
   i. Framing: Nominal 2x4 wood studs or min. 25 GA, min. 3-1/2 in. wide, steel channel studs, spaced max. 24 in. on center (oc).
   ii. Gypsum Board: 5/8 in. thick Type X, one layer per side.

IFT/PF 60-01 (2 of 2)

B. CONCRETE CONSTRUCTION – Min. 4-1/2 in. (114mm) thickness, lightweight or normal weight reinforced concrete having a nominal density of 100-150 pcf.

C. CONCRETE MASONRY UNIT (CMU) CONSTRUCTION – Nominal 8 in. (203mm) thick concrete blocks (filled or unfilled).

Verify compliance of the supporting construction with its corresponding listed design.

2. PENETRATING ITEM: Refer to Figure 1 and Table 1. Position a max. 4 in. diameter plastic pipe in the opening made in the Supporting Construction (Item 1). Use any of the following pipe types in Schedule 40 or thinner: ABS, PVC, or RNC. Establish an annular space, per Table 1, between the Penetrating Item and the Supporting Construction (Item 1).

3. FILL, VOID, OR CAVITY MATERIAL: Refer to Figure 1 and Table 1. Apply the following materials as indicated below:

A. **CERTIFIED MANUFACTURER:** International Fireproof Technology

CERTIFIED PRODUCT: Intumescent Strip

CERTIFIED MODEL: IFTI INFS0812

Apply two individual layers of nominal 5mm thick IFTI INFS0812 Intumescent Strip, each tightly wrapped around the Penetrating Item (Item 2) on both sides of the Supporting Construction (Item 1). Secure the IFTI INFS0812 Intumescent Strips with aluminum foil tape, and position them in the annular space such that the top of the IFTI INFS0812 Intumescent Strips are 10mm beyond the outer surface of the Supporting Construction (Item 1) on both sides. See Table 1 for required height of intumescent strip.

B. **CERTIFIED MANUFACTURER:** International Fireproof Technology

CERTIFIED PRODUCT: Firestop Sealant

CERTIFIED MODEL: IFTI INSS1440 Fire Barrier Caulk

Apply a 1/8 in. (3mm) bead of IFTI INSS1440 Fire Barrier Caulk around the interface of the INFS0812 Intumescent Strips (Item 3A) and the Supporting Construction (Item 1), in the remaining annular space. Tool the surface of the firestop sealant to a smooth finish.

IFT/PF 60-02

intertek
Total Quality. Assured.

Division 07– Thermal and Moisture Protection
07 84 00 Firestopping
07 84 13 Penetration Firestopping

International Fireproof Technology
Design No. IFT/PF 60-02
Through Penetration Firestop System
IFTI SSCI Firestop Collar, IFTI INFS0812 Intumescent Strip and IFTI INSS1440 Fire Barrier Caulk
ASTM E814-13a (2017) and CAN/ULC-S115-11 at 50 Pa
Rating: See Table 1

Penetrating Item Material (Sch 40 or thinner)	Max. Pipe Dia. (in.)	Max. Dia. of Opening (in. [mm])	Annular Space in. (mm)		Min. SSCI-X Collar Height (mm)	Min. INFS0812 Thick x Height (mm)	INSS1440 Depth in. (mm)	Rating (min)					
								ASTM E814		CAN/ULC S115			
			Min.	Max.				T	F	F	FT	FH	FTH
PVC	4	5 (127)	0 (0)	1/2 (13)	60	2@ 5 x 60	1/8 (3)	60	60	60	60	60	60
RNC	4	5 (127)	0 (0)	1/2 (13)	60	2@ 5 x 60	1/8 (3)	60	60	60	60	60	60
XFR	4	5 (127)	0 (0)	1/2 (13)	60	2@ 5 x 60	1/8 (3)	59	60	60	59	60	59
ABS	4	5 (127)	0 (0)	1/2 (13)	60	2@ 5 x 60	1/8 (3)	59	60	60	59	60	59
CPVC	4	5 (127)	0 (0)	1/2 (13)	80	2@ 5 x 80	1/8 (3)	59	60	60	59	60	59

Table 1. Through Penetration Firestop System Installation Details and Ratings

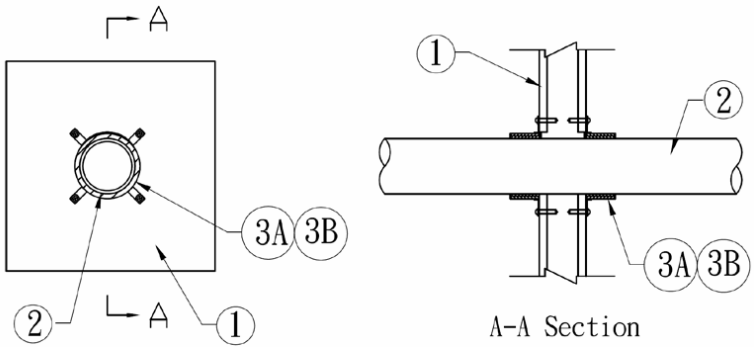

Figure 1. Through Penetration Firestop System

1. **SUPPORTING CONSTRUCTION:** Refer to Figure 1. Opening size shall be 1/2 in. larger than the OD of the penetrating pipe. Create a round through-opening in a symmetrical, Code-conforming, 1 hour fire-rated wall assembly consisting of the min. construction features of one of the following options:

A. GYPSUM WALLBOARD CONSTRUCTION –
   i. Framing: Nominal 2x4 wood studs or min. 25 GA, min. 3-1/2 in. wide, steel channel studs, spaced max. 24 in. on center (oc).
   ii. Gypsum Board: 5/8 in. thick Type X, one layer per side.

IFT/PF 60-02 (2 of 3)

B. CONCRETE CONSTRUCTION – Min. 4-1/2 in. (114mm) thickness, lightweight or normal weight reinforced concrete having a nominal density of 100-150 pcf.

C. CONCRETE MASONRY UNIT (CMU) CONSTRUCTION – Nominal 8 in. (203mm) thick concrete blocks (filled or unfilled).

Verify compliance of the supporting construction with its corresponding listed design.

2. **PENETRATING ITEM:** Refer to Figure 1 and Table 1. Position a max. 4 in. diameter plastic pipe in the opening made in the Supporting Construction (Item 1). Use any of the following pipe types in Schedule 40 or thinner: ABS, PVC, XFR, CPVC, or RNC. Establish an annular space, per Table 1, between the Penetrating Item and the Supporting Construction (Item 1).

3. **FILL, VOID, OR CAVITY MATERIAL:** Refer to Figure 1 and Table 1. Apply the following materials as indicated below:

A. **CERTIFIED MANUFACTURER:** International Fireproof Technology

CERTIFIED PRODUCT: Intumescent Strip

CERTIFIED MODEL: IFTI INFS0812 IFTI

Apply two individual layers of nominal 5mm thick IFTI INFS0812 Intumescent Strip, each tightly wrapped around the Penetrating Item (Item 2) on both sides of the Supporting Construction (Item 1). Secure the IFTI INFS0812 Intumescent Strips with aluminum foil tape, and butt them against the Supporting Construction (Item 1) on both sides. See Table 1 for required height of intumescent strip. The IFTI INFS0812 Intumescent Strip can be either bulk packaged and cut to fit or part of a SSCI Firestop Collar kit with all components required for installation, packaged together.

B. **CERTIFIED MANUFACTURER:** International Fireproof Technology

CERTIFIED PRODUCT: Firestop Collar

CERTIFIED MODEL: IFTI® SSCI Firestop Collar

Install an IFTI SSCI-X Firestop Collar sized appropriately for the Penetrating Item (Item 1) over the two layers of IFTI INFS0812 Intumescent Strip (Item 3A) on each side of the Supporting Construction (Item 1) using the supplied clamp. Secure each using 3/16 in. diameter fasteners of appropriate length for the specific Supporting Construction (Item 1) and 1-1/2 in. diameter, steel, flat washers. Use toggle bolts in gypsum based Supporting Construction (Item 1) and concrete anchors in concreted based Supporting Construction (Item 1). Use between three and four fasteners, as appropriate for the size of the Penetrating Item (Item 2). See Table 1 for required collar height. The IFTI SSCI Firestop Collar can be either bulk packaged and cut to fit or part of a SSCI Firestop Collar kit with all components required for installation, packaged together.

C. **CERTIFIED MANUFACTURER:** International Fireproof Technology

CERTIFIED PRODUCT: Firestop Sealant

IFT/PF 60-02 (3 of 3)

Division 07– Thermal and Moisture Protection
07 84 00 Firestopping
07 84 13 Penetration Firestopping

CERTIFIED MODEL: IFTI INSS1440 Fire Barrier Caulk

(Not Shown) Apply a 1/8 in. (3mm) bead of IFTI INSS1440 Fire Barrier Caulk around the interface of the Firestop Collars (Item 3B) and the Supporting Construction (Item 1). Tool the surface of the firestop sealant to a smooth finish.

IFT/PF 60-03

intertek
Total Quality. Assured.

Division 07 – Thermal and Moisture Protection
07 84 00 Firestopping
07 84 13 Penetration Firestopping

International Fireproof Technology
Design No. IFT/PF 60-03
Through Penetration Firestop System
IFTI INFS0812 Intumescent Strip and IFTI INSS1440 Fire Barrier Caulk
ASTM E814-13a (2017) and CAN/ULC-S115-11 at 50 Pa
Rating: See Table 1

Penetrating Item Material (Sch 40 or thinner)	Max. Pipe Dia. (in.)	Max. Dia. of Opening (in. [mm])	Annular Space (in. [mm])		Min. INFS0812 Thick x Height (mm)	INSS1440 Depth (in. [mm])	Rating (min)					
							ASTM E814		CAN/ULC S115			
			Min	Max			T	F	F	FT	FH	FTH
PVC	2	3 (76)	3/16 (5)	7/16 (11)	1 @ 5 x 60	1/8 (3)	60	60	60	60	60	60
RNC	2	3 (76)	3/16 (5)	7/16 (11)	1 @ 5 x 60	1/8 (3)	60	60	60	60	60	60
ABS	2	3 (76)	3/16 (5)	7/16 (11)	1 @ 5 x 60	1/8 (3)	60	60	60	60	60	60

Table 1. Through Penetration Firestop System Installation Details and Ratings

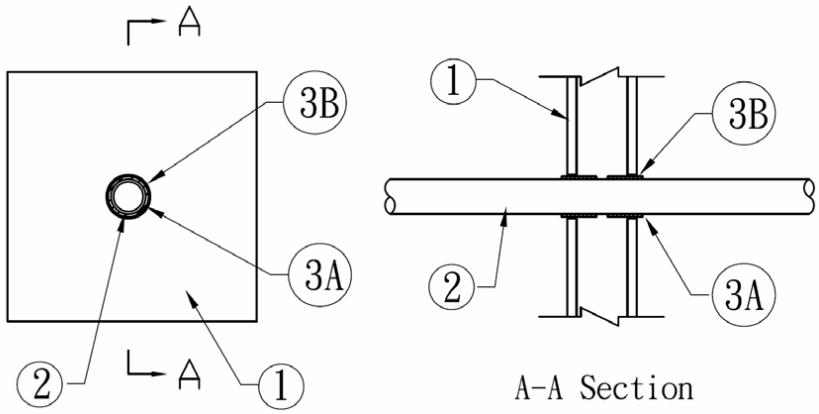

Figure 1. Through Penetration Firestop System

1. **SUPPORTING CONSTRUCTION:** Refer to Figure 1. Opening size shall be 5/8 in. larger than the OD of the penetrating pipe. Create a round through-opening in a symmetrical, Code-conforming, 1 hour fire-rated wall assembly consisting of the min. construction features of one of the following options:

A. GYPSUM WALLBOARD CONSTRUCTION –
   i. Framing: Nominal 2x4 wood studs or min. 25 GA, min. 3-1/2 in. wide, steel channel studs, spaced max. 24 in. on center (oc).
   ii. Gypsum Board: 5/8 in. thick Type X, one layer per side.

IFT/PF 60-03 (2 of 2)

B. CONCRETE CONSTRUCTION – Min. 4-1/2 in. (114mm) thickness, lightweight or normal weight reinforced concrete having a nominal density of 100-150 pcf.

C. CONCRETE MASONRY UNIT (CMU) CONSTRUCTION: Nominal 8 in. (203mm) thick concrete blocks (filled or unfilled).

Verify compliance of the supporting construction with its corresponding listed design.

2. PENETRATING ITEM: Refer to Figure 1 and Table 1. Position a max. 2 in.-diameter plastic pipe in the opening made in the Supporting Construction (Item 1). Use any of the following pipe types in Schedule 40 or thinner: ABS, PVC, or RNC. Establish an annular space, per Table 1, between the Penetrating Item and the Supporting Construction (Item 1).

3. FILL, VOID, OR CAVITY MATERIAL: Refer to Figure 1 and Table 1. Apply the following materials as indicated below:

A. **CERTIFIED MANUFACTURER:** International Fireproof Technology

CERTIFIED PRODUCT: Intumescent Strip

CERTIFIED MODEL: IFTI INFS0812

Apply one individual layer of nominal 5mm thick IFTI INFS0812 Intumescent Strip, tightly wrapped around the Penetrating Item (Item 2) on both sides of the Supporting Construction (Item 1). Secure the IFTI INFS0812 Intumescent Strips with aluminum foil tape, and position them in the annular space such that the top of the IFTI INFS0812 Intumescent Strips are 10mm beyond the outer surface of the Supporting Construction (Item 1) on both sides. See Table 1 for required height of intumescent strip.

B. **CERTIFIED MANUFACTURER:** International Fireproof Technology

CERTIFIED PRODUCT: Firestop Sealant

CERTIFIED MODEL: IFTI INSS1440 Fire Barrier Caulk

Apply a 1/8 in. (3mm) bead of IFTI INSS1440 Fire Barrier Caulk around the interface of the INFS0812 Intumescent Strips (Item 3A) and the Supporting Construction (Item 1), in the remaining annular space. Tool the surface of the firestop sealant to a smooth finish.

IFT/PF 60-04

intertek
Total Quality. Assured.

Division 07 – Thermal and Moisture Protection
07 84 00 Firestopping
07 84 13 Penetration Firestopping

International Fireproof Technology
Design No. IFT/PF 60-04
Through Penetration Firestop System
IFTI FM011 Moldable Firestop Putty
ASTM E814-13a (2017) and CAN/ULC-S115-11 at 2.5 Pa
Rating: See Table 1

Penetrating Item Material (Sch 40 or thinner)	Max. Pipe Dia. (in.)	Max. Dia. of Opening (in. [mm])	Annular Space (in. [mm])		FM011 Depth (in. [mm])	Rating (min)					
						ASTM E814		CAN/ULC S115			
			Min	Max		T	F	F	FT	FH	FTH
PVC	2	3-1/2 (89)	1/8 (3)	1 (25.4)	5/8 (16)	0	0	60	9	0	0
ABS	2	3-1/2 (89)	1/8 (3)	1 (25.4)	5/8 (16)	0	0	60	9	0	0

Table 1. Through Penetration Firestop System Installation Details and Ratings

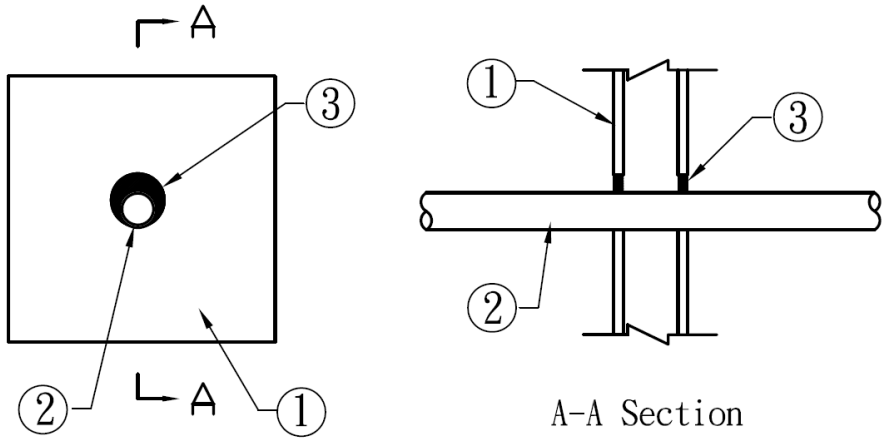

Figure 1. Through Penetration Firestop System

1. **SUPPORTING CONSTRUCTION:** Refer to Figure 1. Opening size shall be 1-1/8 in. larger than the OD of the penetrating pipe. Create a round through-opening in a symmetrical, Code-conforming, 1 hour fire-rated wall assembly consisting of the min. construction features of one of the following options:

A. GYPSUM WALLBOARD CONSTRUCTION –
   i. Framing: Nominal 2x4 wood studs or min. 25 GA, min. 3-1/2 in. wide, steel channel studs, spaced max. 24 in. on center (oc).
   ii. Gypsum Board: 5/8 in. thick Type X, one layer per side.

IFT/PF 60-04 (2 of 2)

Division 07 – Thermal and Moisture Protection
07 84 00 Firestopping
07 84 13 Penetration Firestopping

B. CONCRETE CONSTRUCTION – Min. 4-1/2 in. (114mm) thickness, lightweight or normal weight reinforced concrete having a nominal density of 100-150 pcf.

C. CONCRETE MASONRY UNIT (CMU) CONSTRUCTION: Nominal 8 in. (203mm) thick concrete blocks (filled or unfilled).

Verify compliance of the supporting construction with its corresponding listed design.

2. **PENETRATING ITEM:** Refer to Figure 1 and Table 1. Position a max. 2 in. diameter plastic pipe in the opening made in the Supporting Construction (Item 1). Use any of the following pipe types in Schedule 40 or thinner: ABS or PVC. Establish an annular space, per Table 1, between the Penetrating Item and the Supporting Construction (Item 1).

3. **FILL, VOID, OR CAVITY MATERIAL:** Refer to Figure 1 and Table 1. Apply the following materials as indicated below:

CERTIFIED MANUFACTURER: International Fireproof Technology

CERTIFIED PRODUCT: Firestop Putty

CERTIFIED MODEL: IFTI FM011 Moldable Firestop Putty

Ensure application area is clean and free of oil, loose dirt, rust, or scale. See Table 1 for required width and depth of moldable putty. Apply the appropriate amount of IFTI FM011 Moldable Firestop Putty around the interface of the Penetrating Item (Item 2) and the Supporting Construction (Item 1), in the remaining annular space on both sides of the Supporting Construction (Item 1). Smooth the surface of the firestop putty by hand to ensure complete contact with the Supporting Construction (Item 1) and the Penetrating Item (Item 2) and an airtight seal.

IFT/PF 60-05

intertek
Total Quality. Assured.

Division 07 – Thermal and Moisture Protection
07 84 00 Firestopping
07 84 13 Penetration Firestopping

International Fireproof Technology
Design No. IFT/PF 60-05
Through Penetration Firestop System
IFTI SSCI Firestop Collar, IFTI INFS0812 Intumescent Strip, and IFTI INSS1440 Fire Barrier Caulk
ASTM E814-13a (2017) and CAN/ULC-S115-11 at 50 Pa
Rating: See Table 1

Penetrating Item Material (Sch 40 or thinner)	Max. Pipe Dia. (in.)	Max. Dia. of Opening (in. [mm])	Annular Space (in. [mm])		Min. SSCI-X Collar Height (mm)	Min. INFS0812 Thick x Height (mm)	INSS1440 Depth (in. [mm])	Rating (min)					
								ASTM E814		CAN/ULC S115			
			Min.	Max.				T	F	F	FT	FH	FTH
PVC	6	7 (178)	0 (0)	1/2 (13)	80	3 @ 5 x 80	1/8 (3)	13	60	60	13	60	13
PVC	6	7 (178)	1/4 (6.5)	1/4 (6.5)	80	3 @ 5 x 80	1/8 (3)	60	60	60	60	60	60
RNC	6	7 (178)	0 (0)	1/2 (13)	80	3 @ 5 x 80	1/8 (3)	13	60	60	13	60	13
RNC	6	7 (178)	1/4 (6.5)	1/4 (6.5)	80	3 @ 5 x 80	1/8 (3)	60	60	60	60	60	60
XFR	6	7 (178)	0 (0)	1/2 (13)	80	3 @ 5 x 80	1/8 (3)	13	60	60	13	60	13
XFR	6	7 (178)	1/4 (6.5)	1/4 (6.5)	80	3 @ 5 x 80	1/8 (3)	60	60	60	60	60	60
ABS	6	7 (178)	0 (0)	1/2 (13)	80	3 @ 5 x 80	1/8 (3)	13	60	60	13	60	13
ABS	6	7 (178)	1/4 (6.5)	1/4 (6.5)	80	3 @ 5 x 80	1/8 (3)	60	60	60	60	60	60

Table 1. Through Penetration Firestop System Installation Details and Ratings

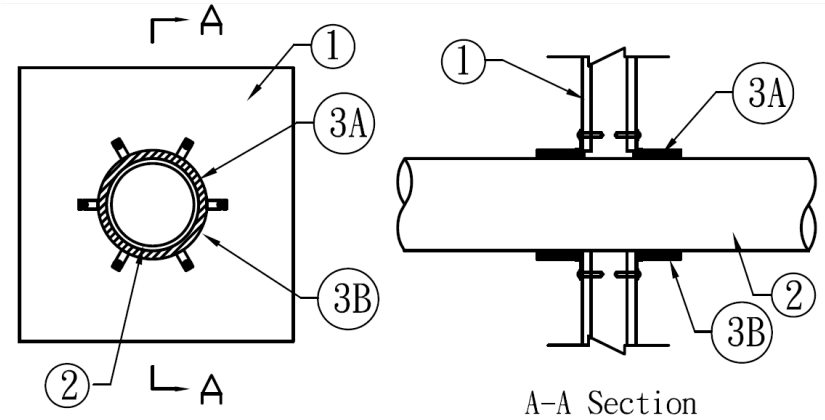

Figure 1. Through Penetration Firestop System

IFT/PF 60-05 (2 of 3)

Division 07 – Thermal and Moisture Protection
07 84 00 Firestopping
07 84 13 Penetration Firestopping

1. **SUPPORTING CONSTRUCTION:** Refer to Figure 1. Opening size shall be 1/2 in. larger than the OD of the penetrating pipe. Create a round through-opening in a symmetrical, Code-conforming, 1 hour fire-rated wall assembly consisting of the min. construction features of one of the following options:

   A. GYPSUM WALLBOARD CONSTRUCTION –
      i. Framing: Nominal 2x4 wood studs or min. 25 GA, min. 3-1/2 in. wide, steel channel studs, spaced max. 24 in. on center (oc).
      ii. Gypsum Board: 5/8 in. thick Type X, one layer per side.

   B. CONCRETE CONSTRUCTION – Min. 4-1/2 in. (114mm) thickness, lightweight or normal weight reinforced concrete having a nominal density of 100-150 pcf.

   C. CONCRETE MASONRY UNIT (CMU) CONSTRUCTION – Nominal 8 in. (203mm) thick concrete blocks (filled or unfilled).

   Verify compliance of the supporting construction with its corresponding listed design.

2. **PENETRATING ITEM:** Refer to Figure 1 and Table 1. Position a max. 6 in.-diameter plastic pipe in the opening made in the Supporting Construction (Item 1). Use any of the following pipe types in Schedule 40 or thinner: ABS, PVC, XFR, or RNC. Establish an annular space, per Table 1, between the Penetrating Item and the Supporting Construction (Item 1).

3. **FILL, VOID, OR CAVITY MATERIAL –** Refer to Figure 1 and Table 1. Apply the following materials as indicated below:

   A. **CERTIFIED MANUFACTURER:** International Fireproof Technology

   CERTIFIED PRODUCT: Intumescent Strip

   CERTIFIED MODEL: IFTI INFS0812

   Apply three individual layers of nominal 5mm thick IFTI INFS0812 Intumescent Strip, each tightly wrapped around the Penetrating Item (Item 2) on both sides of the Supporting Construction (Item 1). Secure the IFTI INFS0812 Intumescent Strips with aluminum foil tape, and butt them against the Supporting Construction (Item 1) on both sides. See Table 1 for required height of intumescent strip. The IFTI INFS0812 Intumescent Strip can be either bulk packaged and cut to fit or part of a SSCI Firestop Collar kit with all components required for installation, packaged together.

   B. **CERTIFIED MANUFACTURER:** International Fireproof Technology

   CERTIFIED PRODUCT: Firestop Collar

   CERTIFIED MODEL: IFTI SSCI Firestop Collar

   Install an IFTI SSCI-X Firestop Collar sized appropriately for the Penetrating Item (Item 1) over the three layers of IFTI INFS0812 Intumescent Strip (Item 3A) on each side of the Supporting Construction (Item 1) using the supplied clamp. Secure each using 3/16 in. diameter fasteners of appropriate length for the specific Supporting Construction (Item 1) and 1-1/2 in. diameter, steel, flat washers. Use toggle bolts in gypsum based Supporting Construction (Item 1) and concrete anchors in concreted based Supporting

IFT/PF 60-05 (3 of 3)

Division 07 – Thermal and Moisture Protection
07 84 00 Firestopping
07 84 13 Penetration Firestopping

Construction (Item 1). Use between three and six fasteners, as appropriate for the size of the Penetrating Item (Item 2). See Table 1 for required collar height. The IFTI SSCI Firestop Collar can be either bulk packaged and cut to fit or part of a SSCI Firestop Collar kit with all components required for installation, packaged together.

C. **CERTIFIED MANUFACTURER:** International Fireproof Technology

CERTIFIED PRODUCT: Firestop Sealant

CERTIFIED MODEL: IFTI INSS1440 Fire Barrier Caulk

(Not Shown) Apply a 1/8 in. (3mm) bead of IFTI INSS1440 Fire Barrier Caulk around the interface of the Firestop Collars (Item 3B) and the Supporting Construction (Item 1). Tool the surface of the firestop sealant to a smooth finish.

IFT/PF 60-06

intertek
Total Quality. Assured.

Division 07 – Thermal and Moisture Protection
07 84 00 Firestopping
07 84 13 Penetration Firestopping

International Fireproof Technology
Design No. IFT/PF 60-06
Through Penetration Firestop System
IFTI INSS1440 Fire Barrier Caulk, IFTI FP-04+ Firestop Sheet, IFTI INFS0812 Intumescent Strip, and IFTI SSCI Firestop Collar
ASTM E814-13a (2017) and CAN/ULC-S115-11 at 50 Pa
Ratings: See Table 1

Penetrating Item Material (Sch 40 or thinner)	Max. Pipe Dia. (in.)	Size of Opening W x H in. (mm)	Min. SSCI-X Collar Height (mm)	Min. INFS0812 Thick x Height (mm)	INSS1440 Depth in. (mm)	Rating (min)					
						ASTM E814		CAN/ULC S115			
						T	F	F	FT	FH	FTH
XFR	3 (76)	24 x 24 (610 x 610)	60	2 @ 5 x 60	1/8 (3)	60	60	60	60	60	60
PVC	6 (152)		80	3 @ 5 x 80	1/8 (3)						
ABS	4 (102)		60	2 @ 5 x 60	1/8 (3)						
XFR	3 (76)	24 x 24 (610 x 610)	60	2 @ 5 x 60	1/8 (3)	60	60	60	60	60	60
PVC	6 (152)		80	3 @ 5 x 80	1/8 (3)						
PVC	4 (102)		60	2 @ 5 x 60	1/8 (3)						

Table 1. Through Penetration Firestop System Installation Details and Ratings

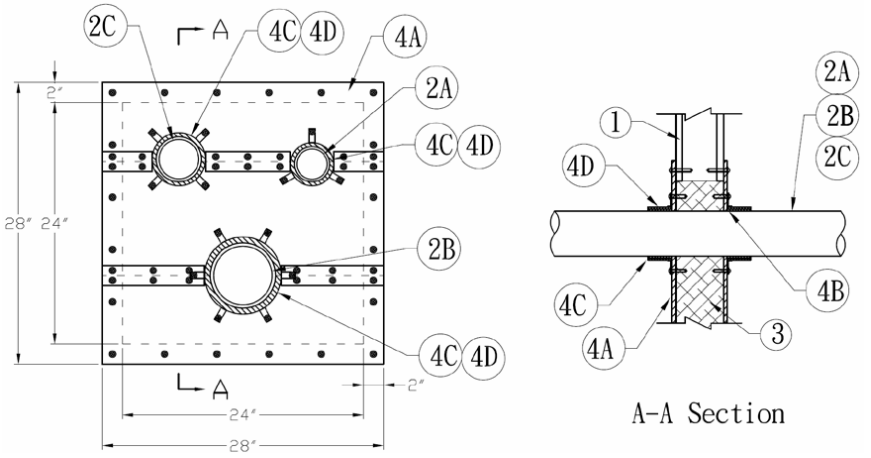

Figure 1. Through Penetration Firestop System

IFT/PF 60-06 (2 of 4)

Division 07 – Thermal and Moisture Protection
07 84 00 Firestopping
07 84 13 Penetration Firestopping

1. **SUPPORTING CONSTRUCTION:** Refer to Figure 1. Create a 24 in. (610mm) square, framed or solid-sided through-opening in a symmetrical, Code-conforming, 1 hour fire-rated wall assembly consisting of the min. construction features of one of the following options:

   A. GYPSUM WALLBOARD CONSTRUCTION –
      i. Framing: Nominal 2x4 wood studs or min. 25 GA, min. 3-1/2 in. wide, steel channel studs, spaced max. 24 in. on center (oc).
      ii. GYPSUM BOARD: 5/8 in. thick Type X, one layer per side.

   B. CONCRETE CONSTRUCTION – Min. 4-1/2 in. (114mm) thickness, lightweight or normal weight reinforced concrete having a nominal density of 100-150 pcf.

   C. CONCRETE MASONRY UNIT (CMU) CONSTRUCTION – Nominal 8 in. (203mm) thick concrete blocks (filled or unfilled).

   Verify compliance of the supporting construction with its corresponding listed design.

2. **PENETRATING ITEMS:** Refer to Figure 1. and Table 1.

   A. Position a nominal 3 in. diameter Schedule 40 XFR plastic pipe in the opening made in the Supporting Construction (Item 1). Establish an annular space of 2 in. (max.) between the Penetrating Item and the right and top edges of the framed opening in the Supporting Construction (Item 1).

   B. Position a nominal 6 in. diameter Schedule 40 PVC plastic pipe, centered horizontally in the opening made in the Supporting Construction (Item 1). Establish an annular space of 2 in. (max.) between the Penetrating Item and the bottom edge of the framed opening in the Supporting Construction (Item 1).

   C. Position an additional nominal 4 in. diameter Schedule 40 plastic pipe in the opening made in the Supporting Construction (Item 1). Establish an annular space of 2 in. (max.) between the Penetrating Item and the left and top edges of the framed opening in the Supporting Construction (Item 1). Use any of the following pipe types for the third pipe: ABS or PVC.

3. **PACKING MATERIAL:** Refer to Figure 1 and Table 1. Apply the following materials as indicated below:

   Completely fill the annular space around the Penetrating Items (Item 2) and the Supporting Construction (Item 1) with tightly packed mineral wool, with a min. density of 4 pcf (64 kg/m^3). Mineral wool is to be installed by stacking layers cut to the width of the wall and compressed 50% during installation. The fibers are to be oriented such that the factory surfaces of the mineral wool material cut from batts are oriented horizontally, parallel with the plane of the floor.

4. **FILL, VOID, OR CAVITY MATERIAL:** Refer to Figure 1 and Table 1. Apply the following materials as indicated below:

   A. **CERTIFIED MANUFACTURER:** International Fireproof Technology

      CERTIFIED PRODUCT: Intumescent Sheet

      CERTIFIED MODEL: IFTI FP-04+ Firestop Sheet

IFT/PF 60-06 (3 of 4)

Cut a 28 in. (711mm) square section of IFTI FP-04+ Firestop Sheet and center it over the opening on both sides of the Supporting Construction (Item 1). Secure the Intumescent Sheet to both sides of the Supporting Construction (Item 1) using #10 x 3-1/2 in. (89mm) wood screws (or similar fasteners appropriate to the Support Construction (Item 1)) around perimeter of intumescent sheet, spaced 1 in. (25mm) in from the edge of the intumescent sheet and nominally 6 in. (152mm) oc along each side. Provide openings for each Penetrating Item (Item 2) in the Intumescent Sheet on each side for each of the three penetrating items. The Intumescent Sheet shall be cut along the nominal horizontal centerline of the Penetrating Items (Item 2) to allow for installation. Install a nominal 2 in. wide strip of Intumescent Sheet centered over each horizontal seam and secure each strip using #8 x 1 in. (25mm) self-tapping screws, nominally every 6 in. on each side of the seam.

B. **CERTIFIED MANUFACTURER:** International Fireproof Technology

CERTIFIED PRODUCT: Firestop Sealant

CERTIFIED MODEL: IFTI INSS1440 Fire Barrier Caulk

(Not Shown) Apply a 1/8 in. (3mm) bead of IFTI INSS1440 Fire Barrier Caulk around the perimeter of each side of the framed opening created in the Supporting Construction (Item 1) prior to installation of the Intumescent Sheet (Item 4A).

(Not Shown) Apply a 1/8 in. (3mm) bead of IFTI INSS1440 Fire Barrier Caulk nominally 1/2 in. above and below the seams in the Intumescent Sheet (Item 4A) prior to installation of the Intumescent Sheet strips over the seams.

Apply a 1/8 in. (3mm) bead of IFTI INSS1440 Fire Barrier Caulk around the interface of each of the Penetrating Items (Item 2) and the Intumescent Sheet (Item 4A). Tool the surface of the firestop sealant to a smooth finish.

C. **CERTIFIED MANUFACTURER:** International Fireproof Technology

CERTIFIED PRODUCT: Intumescent Strip

CERTIFIED MODEL: IFTI INFS0812

Refer to Figure 1 and Table 1. Apply two or three individual layers of nominal 5mm thick IFTI INFS0812 Intumescent Strip, each tightly wrapped around the appropriate Penetrating Item (Item 2) on both sides of the Supporting Construction (Item 1). Secure the IFTI INFS0812 Intumescent Strips with aluminum foil tape and butt them against the Intumescent Sheet (Item 4A) on both sides. See Table 1. for required height of intumescent strip. The IFTI INFS0812 Intumescent Strip can be either bulk packaged and cut to fit or part of a SSCI Firestop Collar kit with all components required for installation, packaged together.

D. **CERTIFIED MANUFACTURER:** International Fireproof Technology

CERTIFIED PRODUCT: Firestop Collar

CERTIFIED MODEL: IFTI SSCI Firestop Collar

IFT/PF 60-06 (4 of 4)

Division 07 – Thermal and Moisture Protection
07 84 00 Firestopping
07 84 13 Penetration Firestopping

Refer to Figure 1 and Table 1. Install a 6 in., 4 in., or 3 in. IFTI SSCI-X Firestop Collar over the two or three layers of IFTI INFS0812 Intumescent Strip (Item 4C), as appropriate, on each side of the Supporting Construction (Item 1) using the supplied clamps. Secure each using three, four, or six #8 x 1 in. (25mm) self-tapping screws.

See Table 1. for required collar height. The IFTI SSCI Firestop Collar can be either bulk packaged and cut to fit or part of a SSCI Firestop Collar kit with all components required for installation, packaged together.

IFT/PF 60-07

intertek
Total Quality. Assured.

Division 07 – Thermal and Moisture Protection
07 84 00 Firestopping
07 84 13 Penetration Firestopping

International Fireproof Technology
Design No. IFT/PF 60-07
Through Penetration Firestop System
IFTI FM011 Moldable Firestop Putty and IFTI INFS0812 Intumescent Strip
ASTM E814-13a (2017) and CAN/ULC-S115-11
Ratings: See Table 1

Penetrating Item Material (Sch 40 or thinner)	Max. Pipe Dia. (in.)	Dia. of Opening (in. [mm])	Annular Space in. (mm)		Min. INFS0812 Thick x Height (mm)	FM011 Depth in. (mm)	Rating (min)					
							ASTM E814		CAN/ULC S115			
			Min.	Max.			T	F	F	FT	FH	FTH
PVC, PVC, PEX	3 @ 1	4-1/2 (114)	3/16 (5)	5/8 (16)	N/A	5/8 (16)	12	60	60	12	60	12
PVC, PVC, CPVC	3 @ 1	4-1/2 (114)	3/16 (5)	5/8 (16)	1 @ 5 x 60 On CPVC only	5/8 (16)	12	60	60	12	60	12
PVC, PVC, PVC	3 @ 1	4-1/2 (114)	3/16 (5)	5/8 (16)	N/A	5/8 (16)	12	60	60	12	60	12
PVC, PVC, RNC	3 @ 1	4-1/2 (114)	3/16 (5)	5/8 (16)	N/A	5/8 (16)	12	60	60	12	60	12

Table 1. Through Penetration Firestop System Installation Details and Ratings

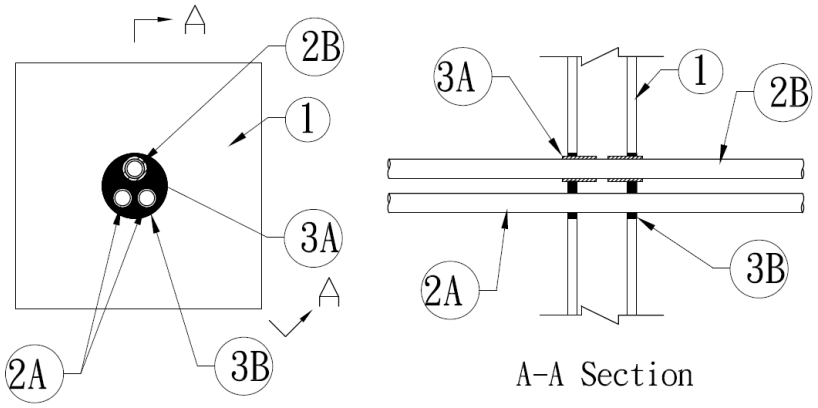

Figure 1. Through Penetration Firestop System

1. **SUPPORTING CONSTRUCTION:** Refer to Figure 1. Create a round through-opening, 4-1/2 in. in diameter, in a symmetrical, Code-conforming, 1 hour fire-rated wall assembly consisting of the min. construction features of one of the following options:

A. GYPSUM WALLBOARD CONSTRUCTION –
   i. Framing: Nominal 2x4 wood studs or min. 25 GA, min. 3-1/2 in. wide, steel channel studs, spaced max. 24-in. on center (oc).
   ii. Gypsum Board: 5/8 in. thick Type X, one layer per side.

IFT/PF 60-07 (2 of 2)

B. CONCRETE CONSTRUCTION – Min. 4-1/2 in. (114mm) thickness, lightweight or normal weight reinforced concrete having a nominal density of 100-150 pcf.

C. CONCRETE MASONRY UNIT (CMU) CONSTRUCTION – Nominal 8 in. (203mm) thick concrete blocks (filled or unfilled).

Verify compliance of the supporting construction with its corresponding listed design.

2. **PENETRATING ITEM:** Refer to Figure 1 and Table 1. Position three Schedule 40 plastic pipes within the opening made in the Supporting Construction (Item 1).

   A. Two pipes shall be nominal 1in. diameter PVC.

   B. Use any of the following pipe types for the third pipe: PEX, CPVC, PVC, or RNC. See Item 3A when CPVC is used.

   Establish an annular space, per Table 1., between the Penetrating Items and the Supporting Construction (Item 1).

3. **FILL, VOID, OR CAVITY MATERIAL:** Refer to Figure 1 and Table 1. Apply the following materials as indicated below:

   A. **CERTIFIED MANUFACTURER:** International Fireproof Technology

   CERTIFIED PRODUCT: Intumescent Strip

   CERTIFIED MODEL: IFTI INFS0812

   Only where the Penetrating Items (Item 2B) is CPVC, apply one individual layer of nominal 5mm thick IFTI INFS0812 Intumescent Strip, tightly wrapped around the Penetrating Item (Item 2B) on both sides of the Supporting Construction (Item 1). Secure the IFTI INFS0812 Intumescent Strips with aluminum foil tape and position them in the annular space such that the top of the IFTI INFS0812 Intumescent Strips are 10mm beyond the outer surface of the Supporting Construction (Item 1) on both sides. See Table 1. for required width of intumescent strip.

   B. **CERTIFIED MANUFACTURER:** International Fireproof Technology

   CERTIFIED PRODUCT: Firestop Putty

   CERTIFIED MODEL: IFTI FM011 Moldable Firestop Putty

   Ensure application area is clean and free of oil, loose dirt, rust, or scale. See Table 1. for required width and depth of moldable putty. Apply the appropriate amount of IFTI FM011 Moldable Firestop Putty around the interface of the Penetrating Items (Item 2A and 2B) and the Supporting Construction (Item 1), in the remaining annular space on both sides of the Supporting Construction (Item 1). Smooth the surface of the firestop putty by hand to ensure complete contact with the Supporting Construction (Item 1) and the Penetrating Item (Item 2) and an airtight seal.

IFT/PF 60-08

intertek
Total Quality. Assured.

Division 07 – Thermal and Moisture Protection
07 84 00 Firestopping
07 84 13 Penetration Firestopping

International Fireproof Technology
Design No. IFT/PF 60-08
Through Penetration Firestop System
IFTI FM011 Moldable Firestop Putty
ASTM E814-13a (2017) and CAN/ULC-S115-11 at 2.5 Pa
Rating: See Table 1

Penetrating Item Material	Max. Pipe Dia. (in.)	Max. Dia. of Opening (in. [mm])	Annular Space in. (mm)		FM011 Depth in. (mm)	Rating (min)					
						ASTM E814		CAN/ULC S115			
			Min.	Max.		T	F	F	FT	FH	FTH
PEX	1	2 (51)	1/8 (3)	9/16 (14)	5/8 (16)	46	60	60	46	60	46

Table 1. Through Penetration Firestop System Installation Details and Ratings

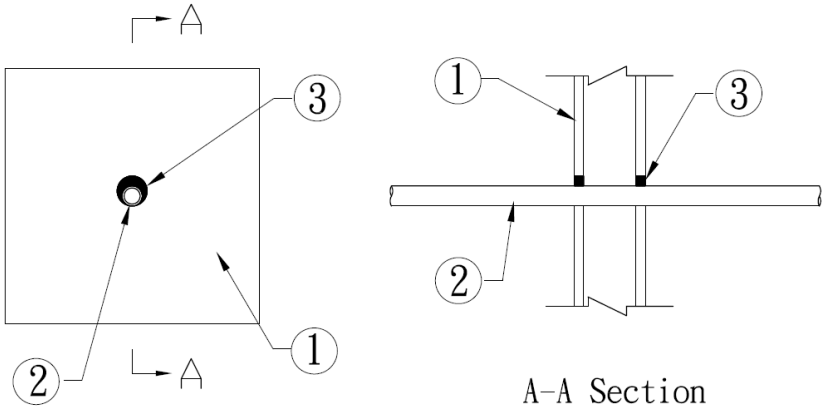

Figure 1. Through Penetration Firestop System

1. **SUPPORTING CONSTRUCTION:** Refer to Figure 1. Opening size shall be 11/16 in. larger than the OD of the penetrating pipe. Create a round through-opening in a symmetrical, Code-conforming, 1 hour fire-rated wall assembly consisting of the min. construction features of one of the following options:

   A. GYPSUM WALLBOARD CONSTRUCTION –
      i. Framing: Nominal 2x4 wood studs or min. 25 GA, min. 3-1/2 in. wide, steel channel studs, spaced max. 24 in. on center (oc).
      ii. Gypsum Board: 5/8 in. thick Type X, one layer per side.

   B. CONCRETE CONSTRUCTION – Min. 4-1/2 in. (114mm) thickness, lightweight or normal weight reinforced concrete having a nominal density of 100-150 pcf.

IFT/PF 60-08 (2 of 2)

Division 07 – Thermal and Moisture Protection
07 84 00 Firestopping
07 84 13 Penetration Firestopping

C. CONCRETE MASONRY UNIT (CMU) CONSTRUCTION – Nominal 8 in. (203mm) thick concrete blocks (filled or unfilled).

Verify compliance of the supporting construction with its corresponding listed design.

2. **PENETRATING ITEM:** Refer to Figure 1 and Table 1. Position a max. 1 in. diameter plastic pipe in the opening made in the Supporting Construction (Item 1). Use any of the following pipe types: PEX. Establish an annular space, per Table 1, between the Penetrating Item and the Supporting Construction (Item 1).

3. **FILL, VOID, OR CAVITY MATERIAL:** Refer to Figure 1 and Table 1. Apply the following materials as indicated below:

CERTIFIED MANUFACTURER: International Fireproof Technology

CERTIFIED PRODUCT: Firestop Putty

CERTIFIED MODEL: IFTI FM011 Moldable Firestop Putty

Ensure application area is clean and free of oil, loose dirt, rust, or scale. See Table 1 for required width and depth of moldable putty. Apply the appropriate amount of IFTI FM011 Moldable Firestop Putty around the interface of the Penetrating Item (Item 2) and the Supporting Construction (Item 1), in the remaining annular space on both sides of the Supporting Construction (Item 1). Smooth the surface of the firestop putty by hand to ensure complete contact with the Supporting Construction (Item 1) and the Penetrating Item (Item 2) and an airtight seal.

IFT/PF 60-09

Total Quality. Assured.

Division 07 – Thermal and Moisture Protection
07 84 00 Firestopping
07 84 13 Penetration Firestopping

International Fireproof Technology
Design No. IFT/PF 60-09
Through Penetration Firestop System
IFTI FM011 Moldable Firestop Putty
ASTM E814-13a (2017) and CAN/ULC-S115-11 at 2.5 Pa
Rating: See Table 1

Penetrating Item Material (Sch 40 or thinner)	Max. Pipe Dia. (in.)	Max. Dia. of Opening (in. [mm])	Annular Space in. (mm)		FM011 Depth in. (mm)	Rating (min)					
						ASTM E814		CAN/ULC S115			
			Min.	Max.		T	F	F	FT	FH	FTH
ABS	1.5	3 (76)	1/8 (3)	1 (25.4)	5/8 (16)	60	60	60	60	60	60
PVC	1.5	3 (76)	1/8 (3)	1 (25.4)	5/8 (16)	60	60	60	60	60	60
RNC	1.5	3 (76)	1/8 (3)	1 (25.4)	5/8 (16)	60	60	60	60	60	60

Table 1. Through Penetration Firestop System Installation Details and Ratings

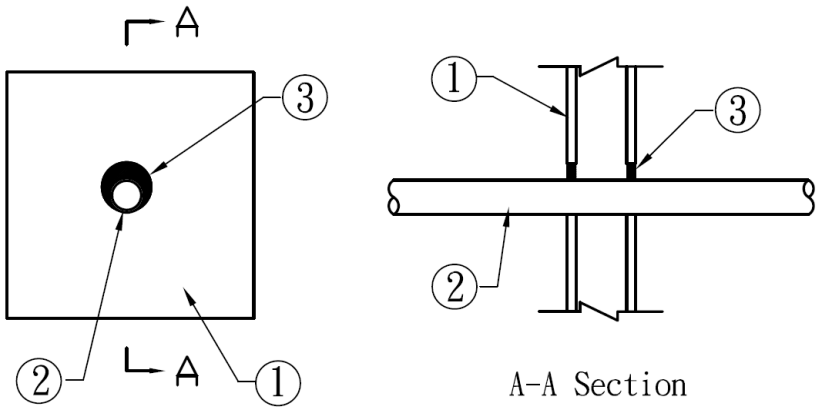

Figure 1. Through Penetration Firestop System

1. **SUPPORTING CONSTRUCTION:** Refer to Figure 1. Opening size shall be 1-1/8 in. larger than the OD of the penetrating pipe. Create a round through-opening in a symmetrical, Code-conforming, 1 hour fire-rated wall assembly consisting of the min. construction features of one of the following options:

A. GYPSUM WALLBOARD CONSTRUCTION –
   i. Framing: Nominal 2x4 wood studs or min. 25 GA, min. 3-1/2 in. wide, steel channel studs, spaced max. 24-in. on center (oc).
   ii. Gypsum Board: 5/8 in. thick Type X, one layer per side.

IFT/PF 60-09 (2 of 2)

Division 07 – Thermal and Moisture Protection
07 84 00 Firestopping
07 84 13 Penetration Firestopping

B. CONCRETE CONSTRUCTION – Min. 4-1/2 in. (114mm) thickness, lightweight or normal weight reinforced concrete having a nominal density of 100-150 pcf.

C. CONCRETE MASONRY UNIT (CMU) CONSTRUCTION – Nominal 8 in. (203mm) thick concrete blocks (filled or unfilled).

Verify compliance of the supporting construction with its corresponding listed design.

2. **PENETRATING ITEM:** Refer to Figure 1 and Table 1. Position a max. 1-1/2 in. diameter plastic pipe in the opening made in the Supporting Construction (Item 1). Use any of the following pipe types in Schedule 40 or thinner: ABS, PVC, RNC. Establish an annular space, per Table 1, between the Penetrating Item and the Supporting Construction (Item 1).

3. **FILL, VOID, OR CAVITY MATERIAL:** Refer to Figure 1 and Table 1. Apply the following materials as indicated below:

CERTIFIED MANUFACTURER: International Fireproof Technology

CERTIFIED PRODUCT: Firestop Putty

CERTIFIED MODEL: IFTI FM011 Moldable Firestop Putty

Ensure application area is clean and free of oil, loose dirt, rust, or scale. See Table 1 for required width and depth of moldable putty. Apply the appropriate amount of IFTI FM011 Moldable Firestop Putty around the interface of the Penetrating Item (Item 2) and the Supporting Construction (Item 1), in the remaining annular space on both sides of the Supporting Construction (Item 1). Smooth the surface of the firestop putty by hand to ensure complete contact with the Supporting Construction (Item 1) and the Penetrating Item (Item 2) and an airtight seal.

IFT/PF 60-11

intertek
Total Quality. Assured.

Division 07 – Thermal and Moisture Protection
07 84 00 Firestopping
07 84 13 Penetration Firestopping

International Fireproof Technology
Design No. IFT/PF 60-11
Through Penetration Firestop System
IFTI FM011 Moldable Firestop Putty
ASTM E814-13a (2017) and CAN/ULC-S115-11 at 2.5 Pa
Ratings: See Table 1

Penetrating Item Material	Nom. Pipe Dia. (in.)	Dia. of Opening in. (mm)	Annular Space in. (mm)		FM011 Depth in. (mm)	Rating (min)					
						ASTM E814		CAN/ULC S115			
			Min.	Max.		T	F	F	FT	FH	FTH
Sch 40 Steel / Iron	30	32 (813)	1/8 (3)	1-7/8 (48)	5/8 (16)	23	60	60	23	60	23
Steel Conduit	6	8 (203)	1/8 (3)	1-7/8 (48)	5/8 (16)	0	0	60	16	0	0
Copper	6	8 (203)	1/8 (3)	1-7/8 (48)	5/8 (16)	0	0	60	16	0	0
EMT	4	6 (152)	1/8 (3)	1-7/8 (48)	5/8 (16)	19	60	60	19	60	19

Table 1. Through Penetration Firestop System Installation Details and Ratings

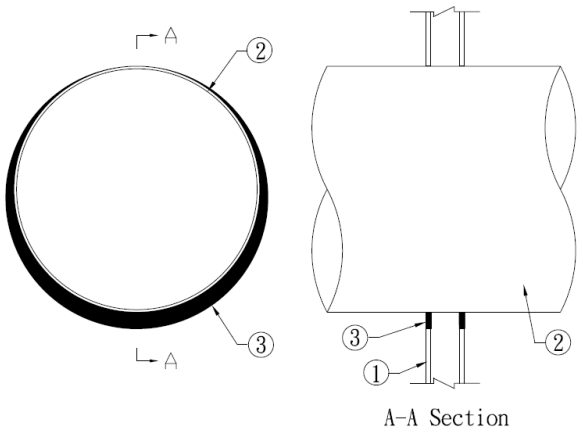

Figure 1. Through Penetration Firestop System

1. **SUPPORTING CONSTRUCTION:** Refer to Figure 1 and Table 1. Create a round through-opening in a symmetrical, Code-conforming, 1 hour fire-rated wall assembly consisting of the min. construction features of one of the following options:

A. GYPSUM WALLBOARD CONSTRUCTION –
   i. Framing: Nominal 2x4 wood studs or min. 25 GA, min. 3-1/2 in. wide, steel channel studs, spaced max. 24 in. on center (oc).

IFT/PF 60-11 (2 of 2)

ii. Gypsum Board: 5/8 in. thick Type X, one layer per side.

B. CONCRETE CONSTRUCTION – Min. 4-1/2 in. (114mm) thickness, lightweight or normal weight reinforced concrete having a nominal density of 100-150 pcf.

C. CONCRETE MASONRY UNIT (CMU) CONSTRUCTION – Nominal 8 in. (203mm) thick concrete blocks (filled or unfilled).

Verify compliance of the supporting construction with its corresponding listed design.

2. PENETRATING ITEM: Refer to Figure 1 and Table 1. Position specified penetrating item in the opening made in the Supporting Construction (Item 1). Establish an annular space between the Penetrating Item and the Supporting Construction (Item 1).

3. FILL, VOID, OR CAVITY MATERIAL: Refer to Figure 1 and Table 1. Apply the following materials as indicated below:

CERTIFIED MANUFACTURER: International Fireproof Technology

CERTIFIED PRODUCT: Firestop Putty

CERTIFIED MODEL: IFTI FM011 Moldable Firestop Putty

Ensure application area is clean and free of oil, loose dirt, rust, or scale. See Table 1. for required width and depth of moldable putty. Apply the appropriate amount of IFTI FM011 Moldable Firestop Putty around the interface of the Penetrating Item (Item 2) and the Supporting Construction (Item 1), in the remaining annular space on both sides of the Supporting Construction (Item 1). Smooth the surface of the firestop putty by hand to ensure complete contact with the Supporting Construction (Item 1) and the Penetrating Item (Item 2) and an airtight seal.

IFT/PF 60-12

intertek
Total Quality. Assured.

Division 07 – Thermal and Moisture Protection
07 84 00 Firestopping
07 84 13 Penetration Firestopping

International Fireproof Technology
Design No. IFT/PF 60-12
Through Penetration Firestop System
IFTI FM011 Moldable Firestop Putty
ASTM E814-13a (2017) and CAN/ULC-S115-11 at 2.5 Pa
Ratings: See Table 1

Penetrating Item Material	Max. Pipe Dia. (in.)	Pipe Insulation Thickness in. (mm)	Max. Dia. of Opening in. (mm)	Annular Space in. (mm)		FM011 Depth in. (mm)	Rating (min)					
							ASTM E814		CAN/ULC S115			
				Min.	Max.		T	F	F	FT	FH	FTH
Copper	6	1 (25)	10 (254)	1/8 (3)	1-7/8 (48)	5/8 (16)	51	60	60	51	60	51
Steel / Iron	6	1 (25)	10 (254)	1/8 (3)	1-7/8 (48)	5/8 (16)	51	60	60	51	60	51
Copper	6	1-1/2 (38)	10 (254)	1/8 (3)	7/8 (22)	5/8 (16)	54	60	60	54	60	54
Steel / Iron	6	1-1/2 (38)	10 (254)	1/8 (3)	7/8 (22)	5/8 (16)	54	60	60	54	60	54

Table 1. Through Penetration Firestop System Installation Details and Ratings

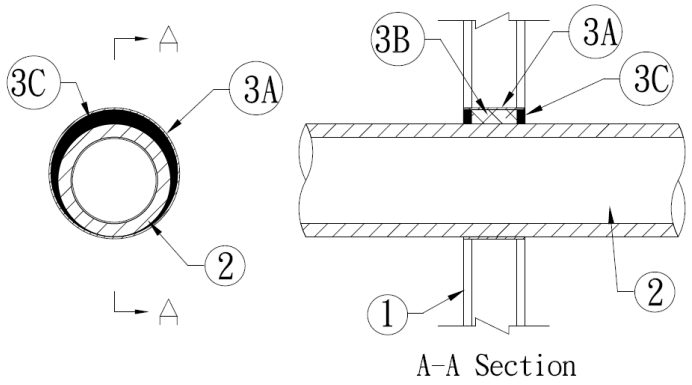

Figure 1. Through Penetration Firestop System

1. **SUPPORTING CONSTRUCTION:** Refer to Figure 1. Opening size shall be 4 in. larger than the OD of the uninsulated penetrating pipe. Create a round through-opening in a symmetrical, Code-conforming, 1 hour fire-rated wall assembly consisting of the min. construction features of one of the following options:

A. GYPSUM WALLBOARD CONSTRUCTION –
   i. Framing: Nominal 2x4 wood studs or min. 25 GA, min. 3-1/2 in. wide, steel channel studs, spaced max. 24-in. on center (oc).

IFT/PF 60-12 (2 of 2)

ii. Gypsum Board: 5/8 in. thick Type X, one layer per side.

B. CONCRETE CONSTRUCTION – Min. 4-1/2 in. (114mm) thickness, lightweight or normal weight reinforced concrete having a nominal density of 100-150 pcf.

C. CONCRETE MASONRY UNIT (CMU) CONSTRUCTION – Nominal 8 in. (203mm) thick concrete blocks (filled or unfilled).

Verify compliance of the supporting construction with its corresponding listed design.

2. PENETRATING ITEM: Refer to Figure 1 and Table 1. Position max. 6 in. diameter copper pipe, with the specified thickness of fiberglass pipe insulation with foil scrim, in the opening made in the Supporting Construction (Item 1). Use any of the following pipe types in Schedule 40 or thicker: Copper (type L), Steel, Ductile Iron, and Cast Iron. Establish an annular space between the Penetrating Item and the Supporting Construction (Item 1).

3. FILL, VOID, OR CAVITY MATERIAL: Refer to Figure 1 and Table 1. Apply the following materials as indicated below:

A. METALLIC SLEEVE – Install galvanized steel (25 GA min.) in the full depth of the Supporting Construction (Item 1), tightly contacting the walls of the opening.

B. Completely fill the annular space around the Penetrating Item (Item 2) and the Metallic Sleeve (Item 3A) with tightly packed mineral wool with a min. density of 4 pcf (64 kg/m^3), to the full depth of the Supporting Construction (Item 1) and the Metallic Sleeve (Item 3A) minus the required depth of Firestop Putty (Item 3C).

C. **CERTIFIED MANUFACTURER:** International Fireproof Technology

CERTIFIED PRODUCT: Firestop Putty

CERTIFIED MODEL: IFTI FM011 Moldable Firestop Putty

Ensure application area is clean and free of oil, loose dirt, rust, or scale. See Table 1. for required width and depth of moldable putty. Apply the appropriate amount of IFTI FM011 Moldable Firestop Putty around the interface of the Penetrating Item (Item 2) and the Supporting Construction (Item 1), in the remaining annular space on both sides of the Supporting Construction (Item 1). Smooth the surface of the firestop putty by hand to ensure complete contact with the Supporting Construction (Item 1) and the Penetrating Item (Item 2) and an airtight seal.

IFT/PF 60-13

intertek
Total Quality. Assured.

Division 07 – Thermal and Moisture Protection
07 84 00 Firestopping
07 84 13 Penetration Firestopping

International Fireproof Technology
Design No. IFT/PF 60-13
Through Penetration Firestop System
IFTI INSS1440 Fire Barrier Caulk
ASTM E814-13a (2017) and CAN/ULC-S115-11 at 2.5 Pa
Rating: See Table 1

Penetrating Item Material	Max. Duct Size W x H. (in.)	Max Size of Opening W x H (in. [mm])	Annular Space (in. [mm])		INSS1440 Depth (in. [mm])	Rating (min)					
						ASTM E814		CAN/ULC S115			
			Min.	Max.		T	F	F	FT	FH	FTH
Min. 18 GA Galvanized Steel, Insulated Duct	28 x 10 (711 x 254)	32 x 14 (813 x 356)	0 (0)	2 (51)	1/8 (3)	60	60	60	60	60	60

Table 1. Through Penetration Firestop System Installation Details and Ratings

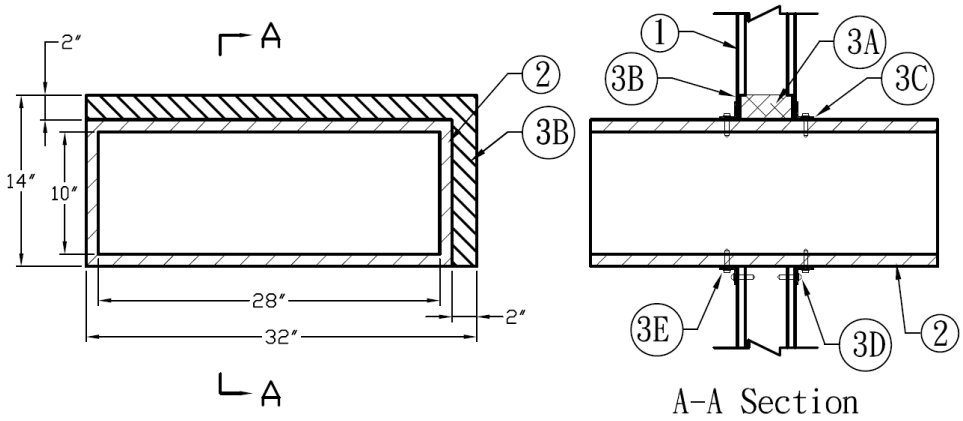

Figure 1. Through Penetration Firestop System

1. **SUPPORTING CONSTRUCTION:** Refer to Figure 1. Opening size shall be 4 in. larger in each direction than the uninsulated size of the penetrating duct. Create a rectangular, framed or solid-sided, through-opening in a symmetrical, Code-conforming, 1 hour fire-rated wall assembly consisting of the min. construction features of one of the following options:

A. GYPSUM WALLBOARD CONSTRUCTION –

i. Framing: Nominal 2x4 wood studs or min. 25 GA, min. 3-1/2 in. wide, steel channel studs, spaced max. 24 in. on center (oc).

IFT/PF 60-13 (2 of 2)

ii. Gypsum Board: 5/8 in. thick Type X, one layer per side.

B. CONCRETE CONSTRUCTION – Min. 4-1/2 in. (114mm) thickness, lightweight or normal weight reinforced concrete having a nominal density of 100-150 pcf.

C. CONCRETE MASONRY UNIT (CMU) CONSTRUCTION – Nominal 8 in. (203mm) thick concrete blocks (filled or unfilled).

Verify compliance of the supporting construction with its corresponding listed design.

2. **PENETRATING ITEM:** Refer to Figure 1 and Table 1. Position a max. 28 in. x 10 in., 18 GA, galvanized steel (min.) duct, insulated with two layers of IFTI FB01-15 Fireproof Blanket in the opening made in the Supporting Construction (Item 1). Establish an annular space, per Table 1, between the Penetrating Item and the Supporting Construction (Item 1).

3. **FILL, VOID, OR CAVITY MATERIAL:** Refer to Figure 1 and Table 1. Apply the following materials as indicated below:

A. Completely fill the annular space around the Penetrating Item (Item 2) and the Supporting Construction (Item 1) with tightly packed mineral wool with a min. density of 4 pcf (64 kg/m^3).

B. **CERTIFIED MANUFACTURER:** International Fireproof Technology

CERTIFIED PRODUCT: Firestop Sealant

CERTIFIED MODEL: IFTI INSS1440 Fire Barrier Caulk

Apply a 1/8 in. (3mm) depth of IFTI INSS1440 Fire Barrier Caulk around the interface of the Penetrating Item (Item 2) and the Supporting Construction (Item 1), on the surface of the mineral wool packing (Item 3A). Tool the surface of the firestop sealant to a smooth finish.

C. REINFORCEMENT ANGLES – On both sides of the Supporting Construction (Item 1), install min. 1-1/4 in. x 1-1/4 in. (32mm x 32mm), 12 GA steel angle tightly around the perimeter of the Penetrating Item (Item 2) and in contact with the Supporting Construction (Item 1) Surface.

D. Affix the Reinforcement Angle (Item 3C) to the Supporting Construction using #10 x 3-1/2 in. (89mm) wood screws spaced 6 in. (152mm) oc around the perimeter.

E. Affix the Reinforcement Angle (Item 3C) to the Penetrating Item (Item 2) using #12 x 2 in. (51mm) self-tapping screws spaced 6 in. (152mm) oc around the perimeter.

Intertek Directory of Listed Products

International Fireproof Technology Inc.	IFTI - DC 315 Water-based Fireproof Paint	OTHER PRODUCTS
International Fireproof Technology Inc.	International Fireproof Technology - Firestop Systems	FIRESTOP SYSTEMS
International Carbide Technology Co., Ltd.	International Carbide Technologies - Joint Systems	EXPANSION/SEISMIC JOINTS

ONLINE CERTIFICATIONS DIRECTORY

InternationaL Fireproof Technology Inc	DC333	Coatings, Fire Retardant	BMQX.R25499
InternationaL Fireproof Technology Inc	FB01-15	Duct-wrap Materials	XHHD.R38513
InternationaL Fireproof Technology Inc		Fill, Void or Cavity Materials	XHHW.R38511
InternationaL Fireproof Technology Inc		Fill, Void or Cavity Materials Certified for Canada	XHHD7.R38511
InternationaL Fireproof Technology Inc	SSCI-X, INFS 0812	Firestop Devices	XHJI.R38512
InternationaL Fireproof Technology Inc	SSCI-X, INFS 0812	Firestop Devices Certified for Canada	XHJI7.R38512

LEED® information Concerning Firestop System Products

This information describes the contribution of Firestop System materials to LEED® Green Building Rating System according with LEED® NC v2.2.

MR Credit 2.1: Construction Waste Management, Divert 50% from Disposal
The following Firestop System materials are recyclable and can contributed complying with Materials and Resources Credit 2.1.

☐ Carton of sealant	cardboard	320g/carton
☐ Carton of putty	cardboard	540g/carton
☐ 310ml Sealant tube	HDPE	50g/tube
☐ 20Kgs Plastic pail	HDPE	740g/pail
☐ 20Kgs Metal bucket	Metal	1050g/bucket
☐ 6Kgs Metal bucket	Metal	460g/bucket

MR Credit 5.1: Regional Materials, 10% Extracted, Processed & Manufactured Regionally
MR Credit 5.2: Regional Materials, 20% Extracted, Processed & Manufactured Regionally
The Firestop System materials have been extracted, harvested or recovered, as well as manufactured, within 500 miles of the project site for minimum of 20% (based on cost) of the total materials value. The materials can contribute to comply with Materials and Resources Credit 5.1 and Credit 5.2.

US110 and US150 Fire Barrier Foam is a two component sytem manufactured on site by the applicator

EQ Credit 4.1: Low Emitting Materials, Adhesives and Sealants
The following listed VOC of Firestop System materials are lower than LEED® requirements.

Product Code of Firestop System	VOC Limited	VOC (g/l)
INSS2460 Silicone Fire Barrier Sealant	250	53.20
INSS1440 Fire Barrier Caulk	250	28.60
FM011 Moldable Firestop Putty	250	16.10
FM012 Firestop Putty	250	11.50
US110 Fire Barrier Foam	250	22.80
US150 Fire Barrier Foam	250	0.00

Please contact IFTI for any questions.

International Fireproof Technology, Inc.
17528 Von Karman Ave. Irvine, CA 92614
949-975-8588
ptp@painttoprotect.com

July 15th, 2015

Firestop Contractors International Association

2015 Membership Certificate

This certifies that

International Fireproof Technology, Inc.
Irvine, California

Is a Manufacturer Branch Member of the Firestop Contractors International Association and pledges to further the mission of FCIA

Gary Hamilton, President 2015

Eric Keeton, Past President
Tracy Smith, Past President
Bryant Bickmore, Director
Mark Dietz, Treasurer
Aedan Gleeson, Director
Bob Hasting, Director
Jay McGuire, Director
Don Murphy, Director
Scott Rankin, Secretary
Ken Slama, Vice President
Bill McHugh, Executive Director

FCIA Member Since: 2015, 7

International Fireproof Technology, Inc.
17528 Von Karman Ave. Irvine, CA 92614
Office: 949-975-8588

IFTI SPEC NOTE: This master specification is written to include SPEC NOTES noted as "IFTI Spec Note" to assist designers in their decision-making process. SPEC NOTES precede the text to which they apply. This section should serve as a guideline only and should be edited by a knowledgeable person to meet the requirements of each specific project.

Text indicated in bold and by square brackets is optional. Make appropriate decisions and delete the optional text as well as the brackets in the final copy of the specification. Delete or hide the SPEC NOTES in the final version of the document.

This specification section is written to follow the recommendations of the Construction Specifications Institute/Construction Specifications Canada (CSI/CSC) such as MasterFormat™, SectionFormat™, and PageFormat™. It is also written with metric and imperial units of measurement.

c

DISCLAIMER: To the best of our knowledge, all technical data contained herein is true and accurate as of the date of issuance and subject to change without prior notice. User must contact IFTI to verify correctness before specifying or ordering. We guarantee our products to conform to the quality control standards established by IFTI. We assume no responsibility for coverage, performance or injuries resulting from use. Liability, if any, is limited to replacement of the product.

NO OTHER WARRANTY OR GUARANTEE OF ANY KIND IS MADE BY IFTI™ EXPRESSED OR IMPLIED; STATUTORY, BY OPERATION OF LAW, OR OTHERWISE, INCLUDING MERCHANTABILITY AND FITNESS FOR A PARTICULAR PURPOSE.

PART 1 - GENERAL

1.1 GENERAL INSTRUCTIONS

A. Read and conform to: The general provisions of the **[Contract Type]**, including General and Supplementary Conditions; and the requirements of Division 01 Specifications and any additional documents referred to in this Section.

1.2 SUMMARY

A. Provide labor, materials, products, equipment and services to complete the firestopping and smoke seals work specified herein. This includes, but is not necessarily limited, to:

1. Penetrations in fire-resistance-rated walls.
2. Penetrations in horizontal assemblies.
3. Penetrations in smoke barriers.
4. Joints in or between fire-resistance-rated constructions.
5. Joints at exterior curtain-wall/floor intersections.
6. Joints in smoke barriers.

B. Related Requirements: Specifications throughout all Divisions of the Project shall be read and may be directly applicable to this Section.

1.3 REFERENCES

IFTI SPEC NOTE: Edit the following paragraphs, deleting those REFERENCES not required for the specific project.

A. The latest published edition of a reference shall be applicable to this Project unless identified by a specific edition date.

B. All reference amendments adopted prior to the Bid Closing date of this Project shall be applicable to this Project.

C. All materials, installation and workmanship shall comply with all applicable requirements and standards.

D. American Society of Testing and Materials (ASTM):

1. ASTM E84: Standard Test Method for Surface Burning Characteristics of Building Materials
2. ASTM E119: Standard Test Methods for Fire Tests of Building Construction and Materials
3. ASTM E814: Standard Test Method for Fire Tests of Penetration Firestop Systems

E. Underwriters Laboratories (UL)

1. UL1479: Fire Tests of Through-Penetration Firestops

1.4 DEFINITIONS

A. Fire Stop Material: device intended to close off opening or penetration during fire or materials that fill openings in wall or floor assembly where penetration is by cables, cable trays, conduits, ducts and pipes and poke-through termination devices, including electrical outlet boxes along with their means of support through wall or floor openings.

B. Single Component Fire Stop System: fire stop material that has Listed Systems Design and is used individually without use of high temperature insulation or other materials to create fire stop system.

C. Multiple Component Fire Stop System: exact group of fire stop materials that are identified within Listed Systems Design to create on site fire stop system.

D. Head-of-Wall Joint Firestop Systems (HW): Systems generally intended for installation in vertical separations between wall and floor or roof structures. These systems are generally not limited in length unless indicated but are limited in width and depth as specified. These firestop systems do not incorporate penetrating items such as pipe or cable. The use of such penetrating items can significantly affect the rating(s) of the systems.

E. Joint Firestop Systems (JF): Systems generally intended for installation in openings such as construction joints, gaps and spaces in floors or walls or at floor and wall intersections, as indicated in the illustrated assemblies. These systems are generally not limited in length unless indicated but are limited in width and depth as specified. These firestop systems do not incorporate penetrating items such as pipe or cable. The use of such penetrating items can significantly affect the rating(s) of the systems.

F. Perimeter Joint Firestop Systems (PJ): Systems consist of a floor with a fire-endurance rating, an exterior wall with or without a fire-endurance rating, and a perimeter joint system. The individual components are not assigned ratings and are not intended to be interchanged between systems. These perimeter joint firestopping systems do not incorporate penetrating items such as pipe or cable. The use of such penetrating items may significantly affect the rating(s) of the systems.

G. Service Penetration Firestop Systems (SP): Systems generally intended for installation in openings of limited dimensions and shape in floor or wall assemblies, as specified in the testing agency's listed systems. If tested, permitted penetrating items such as pipe, cable, cable trays, etc., will be specifically identified in the testing agency's listed systems and corresponding text. Unless specifically described in the individual systems, the use of penetrating items of alternate size, type, quantity, etc., can significantly affect the rating(s) of the system.

H. Service Penetration for Combustible Systems (SPC): Systems generally intended for installation in openings of limited dimensions and shape in floor or wall assemblies, as specified in the testing agency's listed systems. These systems are tested with a minimum differential pressure of 50 Pa between the exposed and unexposed surfaces of the assembly to meet the requirements for combustible pipe for use in drain, waste and vent piping as referenced in the "National Building Code of Canada."

I. F Rating: A firestop system is considered as meeting the requirements for an F rating if it remains in the opening during the fire test for the rating period without permitting the passage of flame through openings, or the occurrence of flaming on any element of the unexposed side of the assembly.

J. FT Rating: A firestop system is considered as meeting the requirements for the FT rating if it remains in the opening during the fire test within the limitations as specified for an F rating and, additionally, the transmission of heat through the firestop system during the rating period will not have been such as to raise the temperature of any thermocouple on the unexposed surface of the firestop system more than 181°C above its initial temperature.

K. FH Rating: A firestop system is considered as meeting the requirements for an FH rating if it remains in the opening during the fire test and hose stream within the limitations for an F rating and, additionally, during the hose stream test, the firestop system will not develop any opening that would permit a projection of water from the stream beyond the unexposed side.

L. FTH Rating: A firestop system is considered as meeting the requirements for an FTH rating if it remains in the opening during the fire test and hose stream test within the limitations as described for F, FT and FH ratings.

M. L Rating: An L rating is based on the volume of air flowing, per unit of time, through the openings around the test sample under a specified pressure difference applied across the surface of the system. The rating is intended to assist Authorities Having Jurisdiction and others in determining the acceptability of firestop systems with reference to the control of air movement through the assembly. The rating is expressed in cubic feet per minute (cfm) per linear foot of opening for joint systems.

1.5 ADMINISTRATIVE REQUIREMENTS

A. Pre-Installation Meetings: convene pre-installation meeting one week prior to beginning work of this Section, with contractor's representative and Architect in accordance with Division 01 requirements to:

1. Verify project requirements.
2. Review installation and substrate conditions.
3. Co-ordination with other building subtrades.
4. Review manufacturer's installation instructions and warranty requirements.

IFTI SPEC NOTE: Use the following paragraph when manufacturer's services are specified during construction operations to verify the installation and application, and co-ordinate with PART 3 - FIELD QUALITY CONTROL as specified below or co-ordinate with appropriate Section used in project. If no field inspections are required, delete the following paragraph.

B. Site Meetings: as part of Manufacturer's Services described in this Section, schedule site visits, to review Work, at stages listed.

1. After delivery and storage of products, and when preparatory Work is complete, but before installation begins.
2. Twice during progress of Work at 25% and 60% complete.
3. Upon completion of Work, after cleaning is carried out.

C. Coordination:

1. Verify openings and penetrating items to ensure firestopping is installed according to specified requirements.
2. Coordinate sizes of sleeves, openings, holes and openings can house firestopping.

Retain paragraph below if Owner plans to engage a testing agency to examine firestopping.

3. Notify independent testing and inspection agency minimum seven (7) days in advance of installations.

1.6 ACTION SUBMITTALS

A. Submit all submittals in accordance with Section [01 33 00 - Submittal Procedures].

B. Product Data:

IFTI SPEC NOTE: Include requests for relevant data to be furnished by the Contractor, before, during or after construction.

1. Submit manufacturer's printed product literature, specifications and datasheet and include product characteristics, performance criteria, physical size, finish and limitations.

C. Shop Drawings:

1. Submit shop drawings to show location, proposed material, reinforcement, anchorage, fastenings and method of installation.
2. Construction details should accurately reflect actual job conditions.
3. Include listings, locations and designations from testing and inspecting agency (UL, FM, WH or similar agency).
4. Where Project conditions require modification to a qualified testing and inspecting agency's illustration for a firestopping condition, submit illustration, with modifications marked, approved by firestopping manufacturer's fire-protection engineer as an engineering judgment or equivalent fire-resistance-rated assembly.

1.7 INFORMATIONAL SUBMITTALS

A. Test reports: Submit reports in accordance with ASTM E119 for fire endurance, ASTM E84 for surface burning characteristics, ANSI/UL 1479 for through penetrations and ANSI/UL 2079 for construction joints.

1. Submit certified test reports from approved independent testing laboratories, indicating compliance of applied fire stopping with specifications for specified performance characteristics and physical properties.

B. Certificates: submit certificates signed by manufacturer certifying that materials comply with specified performance characteristics and physical properties.

1. Manufacturer's Instructions: submit manufacturer's installation instructions and special handling criteria, installation sequence, and cleaning procedures.

IFTI SPEC NOTE: Confirm job size warrants field reports by manufacturer prior to specifying.

A. Manufacturer's Field Reports: submit to Architect, manufacturer's written reports within 3 days of review, verifying compliance of Work, as described in this Section.

Spec Note: Include the information below only if the Project is attempting to meet some very specific LEED criteria. Verify with the rest of the Project team to see if the products specified in this Section have any significant LEED credit impact.

B. Sustainable Design Submittals (LEED): Submit following information for products used in this Section.

1. Recycled Content: Submit listing of recycled content products used, including details of required percentages of recycled content materials and products, showing their costs and percentages of post-consumer and post-industrial content, and total cost of materials for project.
2. Local/Regional Materials: Indicate location of manufacturing facility; indicate distance between manufacturing facility and the project site and cost.
3. VOC data (Adhesives – Field Applied): Submit manufacturer’s product data for adhesives. Indicate VOC limits of the product. Submit MSDS highlighting VOC limits.

1.8 QUALITY ASSURANCE

A. Qualifications:

1. **[Installer: company specializing in fire stopping installations with 5 years documented experience and approved by manufacturer.]**
2. **[Installer: company specializing in fire stopping installations and approved by [FM Global] [UL] [FCIA]**].

B. Manufacturers:

1. Provide products by a firm specializing in the fabrication of firestopping who has successfully produced work similar in design and extent to that required for the project, in not less than three (3) projects of similar size and scope and whose work has resulted in construction with a record of successful in-service performance for a minimum period of ten (10) years.
2. Manufacturer shall have a program of continuous quality management implemented conforming to the requirements of ISO 9001. Submit proof of certification upon request.

C. Source Limitations: Obtain each firestopping and smoke seal system from single source from single manufacturer or provide a system approved in writing by firestopping manufacturer.

1.9 DELIVERY, STORAGE AND HANDLING

A. Packing, shipping, handling and unloading:

1. Deliver, store and handle materials in accordance with manufacturer's written instructions.
2. Deliver materials to the site in undamaged condition and in original unopened containers, marked to indicate brand name, manufacturer, and testing agency’s listings and markings.

B. Storage and Protection:

1. Store materials in accordance with manufacturer's recommendations in clean, dry, well-ventilated area.
2. Replace defective or damaged materials with new.

1.10 PROJECT CONDITIONS

A. Environmental Limitations: Do not install firestopping when ambient or substrate temperatures are outside of the limits permitted by manufacturers or when substrates are wet.

B. Install and cure firestopping in accordance with manufacturer's written instructions.

PART 2 - PRODUCTS

2.1 MANUFACTURERS

A. Materials specified in this Section are based on products by International Fireproof Technology Inc; 6208, 17528 Von Karman Ave, Irvine, CA 92614, United States Tel: (949) 975-8588 Web: www.painttoprotect.com; as listed in this Specification.

B. Substitution Limitations: **[No further substitutions are acceptable.] [Conforming to requirements of Section 01 25 00 - Substitution Procedures]**

2.2 REGULATORY REQUIREMENTS

A. Products shall meet requirements of municipal, state, or federal authorities having jurisdiction.

B. Firestopping systems shall comply with the following requirements:

1. Provide rated systems complying with the following requirements based on tests performed by a qualified testing agency acceptable to authorities having jurisdiction:
2. All systems and products shall bear the classification rating and listing of a qualified testing agency based on designations listed by one of the following:

Retain only subparagraph(s) below that reference the directories of testing agency or agencies approved by authorities having jurisdiction.

a. UL "Fire Resistance Directory."
b. Intertek ETL SEMKO "Directory of Listed Building Products."
c. [WH-Intertek Directory]
d. [FM Approvals].

2.3 DESIGN AND PERFORMANCE REQUIREMENTS

A. Provide asbestos-free materials and systems capable of maintaining effective barrier against flame, smoke and gases in compliance with requirements of ASTM E814 or UL1479 and not exceeding opening sizes for which they are intended.

1. F-Rating: At least 1 hour, but not less than the fire-resistance rating of constructions penetrated.
2. T-Rating: At least 1 hour, but not less than the fire-resistance rating of constructions penetrated.
3. L-Rating: Not exceeding 5.0 cfm/sq. ft. of penetration opening at both ambient and elevated temperatures.
4. Retain first paragraph below if horizontal assemblies require W-ratings. W-rating indicates resistance to water leakage. W-Rating: Provide firestopping showing no evidence of water leakage when tested according to UL 1479.

B. Design firestopping to resist spread of fire according to requirements indicated, resist passage of smoke and other gases, and maintain original fire-resistance rating of construction penetrated.

C. Ensure firestopping systems are compatible with each other, and with substrates forming parts of the assembly.

2.4 MATERIALS

IFTI SPEC NOTE: Retain only those paragraphs below that apply to the Project.

A. Intumescent Acrylic Sealants: single component water-based acrylic intumescent firestop sealant used for sealing gaps around single or multiple penetrations through interior walls and floors, or for sealing gaps around doors and window frames in critically fire rated structures.

1. Acceptable Product: “INSS1440 Fire Barrier Caulk” by International Fireproof Technology Inc.

B. Silicone Sealants: one-part, neutral-curing silicone sealant used to control the spread of fire, smoke, toxic gases, and water during fire conditions designed to seal gaps around penetrations through fire-rated floors, walls or other assemblies as well as for sealing gaps around window and door frames in critically fire-rated structures.

1. Acceptable Product: “INSS2460 & INSS2460+ Fire Barrier Silicone Sealant” by International Fireproof Technology Inc.

C. Fire-rated Elastomeric Sealants: water based acrylic elastomeric fire rated sealant that does not re-emulsify.

1. Acceptable Product: “INSS1186 Elastomeric FireCaulk” by International Fireproof Technology Inc.

D. Intumescent Putties: Nonhardening dielectric, water-resistant putties containing no solvents, inorganic fibers, or silicone compounds designed to seal gaps around through-penetrations and block the passage of flame, toxic fumes and smoke.

1. Acceptable Product:

a. "FM012 Firestop Putty" by International Fireproof Technology Inc.
b. "FM011 Moldable Firestop Putty" by International Fireproof Technology Inc.
c. "Putty Pad" by International Fireproof Technology Inc.

E. Smoke and Acoustic Sealant: high performance acrylic based sealant for sealing construction joints and through penetrations in non-fire-rated assemblies to reducing the transmission of sound through wall openings.

1. Acceptable Product: "INSS0285 Smoke and Acoustic Sealant" by International Fireproof Technology Inc.

F. Firestop Collars: Factory-assembled collars formed from stainless steel and lined with intumescent material sized to tightly fit specific diameter of penetrant to restore the fire resistance rating of walls, floors and seals against the passage of flames, toxic fumes and smoke.

1. Acceptable Product: "SSCI Firestop Collar" by International Fireproof Technology Inc.

G. Firestop Sheets: fabricated by bonding proprietary intumescent materials to metal sheets to securely block flame and seal large penetrations through fire-rated walls and floors; and used for shielding cable trays, conduit, HVAC and vital process equipment from radiant heat, flame spread and smoke.

1. Acceptable Product:

a. "FP-02 Firestop Sheet" by International Fireproof Technology Inc.
b. "FP-04+ Firestop Sheet" by International Fireproof Technology Inc.

H. Intumescent Wrap Strips: Single-component intumescent elastomeric sheets with aluminum foil on one side, designed to block the spread of fire, smoke, toxic gases, when used with combustible penetrants such as plastic pipe.

1. Acceptable Product: "INFS0812" by International Fireproof Technology Inc.

I. Firestop Blankets: Fire-resistant wrap consisting of ceramic fiber blanket encapsulated with scrim-reinforced foil to provide flexible, non-combustible enclosure for duct or cable tray applications.

1. Acceptable Product: "FB01-15" by International Fireproof Technology Inc.

J. Slag-wool-fiber or rock-wool-fiber insulation board with intumescent coating: 50mm thick high-density mineral fiberboard coated with an intumescent coating used to create a fire barrier system, which can restore up to 2 hours fire rating.

1. Acceptable Product: "FP05 Coated Firestop Board" by International Fireproof Technology Inc.

K. Mortars: Prepackaged mix comprised of proprietary blend of gypsum and cement, non-shrinking, paintable, fast drying mortar formulated for mixing with water at Project site to form a no shrinking, homogeneous mortar to prevent passage of flame, smoke, and toxic fumes.

1. Acceptable Product: "CFS01 Mortar" by International Fireproof Technology Inc.

L. Firestop Bricks: Reusable heat-expanding bricks of medium density, flexible polyurethane foam designed to firestop large openings containing various penetrants.

1. Acceptable Product: “US150 Firestop Brick” by International Fireproof Technology Inc.

M. Fire-Barrier Foam: Multicomponent, two component foam, which when mixed, forms a flexible medium-density fire-retardant foam designed to seal large openings containing multiple penetrations such as cable bundles, cable trays and metallic pipes.

1. Acceptable Product:

a. “US110 Fire Barrier Foam” by International Fireproof Technology Inc.
b. “US150 Fire Barrier Foam” by International Fireproof Technology Inc.

2.5 ACCESSORIES

A. Provide components for each firestopping system that are needed to install firestopping materials and to maintain ratings required. Use only those components specified by firestopping manufacturer and approved in tested assemblies.

B. Primers: to manufacturer's recommendation for specific material, substrate, and end use.

C. Water (if applicable): potable, clean and free from injurious amounts of deleterious substances.

D. Damming and backup materials, supports and anchoring devices: to manufacturer's recommendations, and in accordance with tested assembly being installed as acceptable to authorities having jurisdiction.

2.6 MIXING

A. Comply with firestopping manufacturer's written instructions for proportioning of materials and mixing requirements to produce products of uniform quality.

PART 3 - EXECUTION

3.1 MANUFACTURER'S INSTRUCTIONS

A. Comply with manufacturer's written recommendations or specifications, including product technical bulletins, handling, storage and installation instructions, and datasheets.

3.2 PREPARATION

A. Examine sizes and conditions of voids to be filled to establish correct thicknesses and installation of materials.

B. Ensure substrates and surfaces are clean, dry and frost free.

C. Prepare surfaces in contact with fire stopping materials and smoke seals to manufacturer's instructions.

D. Mask where necessary to avoid spillage and over coating onto adjoining surfaces; remove stains on adjacent surfaces.

3.3 INSTALLATION

A. Install firestopping and smoke seal material and components in accordance with manufacturer's certified tested system listing.

B. Seal holes or voids made by through penetrations, poke-through termination devices, and unpenetrated openings or joints to ensure continuity and integrity of fire separation are maintained.

C. Provide temporary forming as required and remove forming only after materials have gained sufficient strength and after initial curing.

D. Tool or trowel exposed surfaces to neat finish.

E. Remove excess compound promptly as work progresses and upon completion.

3.4 IDENTIFICATION

IFTI SPEC NOTE: Retain this article if labels are required.

A. Identify penetration firestopping with preprinted metal or plastic labels. Attach labels permanently to surfaces adjacent to and within 6 inches of firestopping edge to ensure labels are visible to maintenance staff. Include following information on labels:

1. The words "Warning - Firestopping - Do Not Disturb. Notify Building Management of Any Damage."
2. Contractor's name, address, and phone number.
3. Designation of applicable testing and inspecting agency.
4. Date of installation.
5. Manufacturer's name.
6. Installer's name.

3.5 FIELD QUALITY CONTROL

A. Inspections:

1. Owner will engage an independent testing agency to inspect installed firestopping and to prepare reports indicating whether the installed work complies with the contract documents.
2. notify **[Architect] [independent inspection and testing agency]** when ready for inspection and prior to concealing or enclosing fire stopping materials and service penetration assemblies.

IFTI SPEC NOTE: Co-ordinate with Submittals as specified below. When manufacturer's services are specified during construction operations to verify the installation, include the following paragraph. If no field inspections are required, delete the following paragraph. Field quality control may incur additional expenses. Confirm job size warrants field reports by manufacturer prior to specifying.

B. [Manufacturer’s Services: Provide manufacturer's field services consisting of product use recommendations and periodic site visits for inspection of product installation in accordance with manufacturer's instructions.

1. Report any inconsistencies from manufacturer’s recommendations immediately to Architect.
2. Schedule site visits to review work at stages listed:

a. After delivery and storage of products, and when preparatory activities on which work of this Section depends is complete, but before installation begins.

b. Twice during progress of work: at **[25%]** and **[60%]** complete.
c. Upon completion of Work, after cleaning is carried out.
d. Obtain field reports within three days of review and submit immediately to Architect.]

3.6 CLEANING

A. On completion and verification of performance of installation, remove surplus materials, excess materials, rubbish, tools and equipment.

B. Remove temporary dams after initial set of fire stopping and smoke seal materials.

3.7 SCHEDULE

IFTI SPEC NOTE: Schedule fire stopping and smoke seal materials at openings and penetrations in fire-resistance rated assemblies either in specification or on drawings.

A. **[Provide UL-classified systems in accordance with system numbers in UL's "Fire Resistance Directory" under product Category XHEZ.]**

IFTI SPEC NOTE: Retain first paragraph below if Intertek ETL SEMKO-listed systems are required.

B. **[Provide Intertek ETL SEMKO-listed systems are indicated, in accordance with system numbers in Intertek ETL SEMKO's "Directory of Listed Building Products".]**

IFTI SPEC NOTE: Retain first paragraph below if FM Global-approved systems are required.

C. **[Provide Intertek FM Global-approved systems, in accordance with system numbers in FM Global's "Building Materials Approval Guide".]**

D. Provide firestop and smoke seal at:

1. Penetrations through fire-resistance rated masonry, concrete, and gypsum board partitions and walls.
2. Edge of floor slabs at curtain wall and precast concrete panels.
3. Top of fire-resistance rated masonry and gypsum board partitions.
4. Intersection of fire-resistance rated masonry and gypsum board partitions.
5. Control and sway joints in fire-resistance rated masonry and gypsum board partitions and walls.
6. Penetrations through fire-resistance rated floor slabs, ceilings and roofs.
7. Openings and sleeves installed for future use through fire separations.
8. Around mechanical and electrical assemblies penetrating fire separations.
9. Other locations required by local building codes.

END OF SECTION